NOTES ON SHIPHANDLING

CONTENTS

Chapter		*Pages*
Introduction		i to iii
1.	THE PIVOT POINT	1 to 6
2.	SLOW SPEED CONTROL	1 to 14
3.	TURNING	1 to 12
4.	THE EFFECTS OF WIND	1 to 17
5.	ANCHOR WORK	1 to 20
6.	INTERACTION	1 to 14
7.	THE USE OF TUGS	1 to 42
8.	THE USE OF BOW THRUSTERS	1 to 22
9.	SPECIAL PROPELLERS AND RUDDERS	1 to 15
10.	TWIN SCREW WORK	1 to 14
11.	SHIP TO SHIP OPERATIONS	1 to 6

APPENDICES

1.	SBM OPERATIONS	1 to 20

CHAPTER ONE

THE PIVOT POINT

Unless stated otherwise each example assumes a ship on even keel in calm conditions and still water. In this situation no forces are involved and the ship has its centre of gravity approximately amidships.

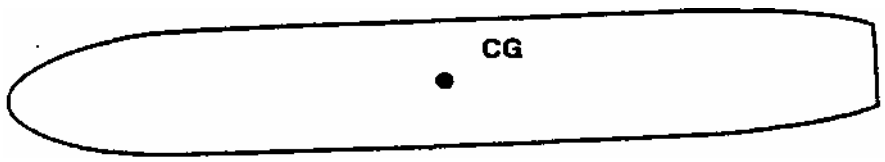

Figure 1-1 Pivot point - stopped

Making Headway

Two forces now come into play, firstly the forward momentum of the ship and secondly, longitudinal resistance to forward momentum, created by the water ahead of the ship. These two forces must ultimately strike a balance and the pivot point moves forward. As a rough guide it can be assumed that 25% of the ships forward momentum, at constant speed, is spent in overcoming longitudinal resistance and the pivot point will be approximately 1/4L from forward.

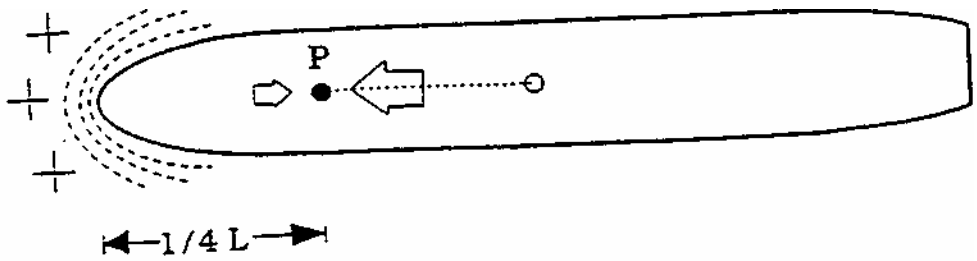

Figure 1-2 Pivot point - making headway

Making Sternway

The situation is now totally reversed, the momentum of sternway must balance longitudinal resistance, this time created by the water astern of the ship. The pivot point moves aft and establishes itself approximately 1/4L from the stern.

Although not intended, some publications may give the impression that the pivot point moves right aft with sternway. This is clearly not correct and can sometimes be misleading. It should also be stressed that other factors such as acceleration, shape of hull and speed may all affect the position of the pivot point. The arbitrary figures quoted here however, are perfectly adequate for a simple and practical working knowledge of the subject.

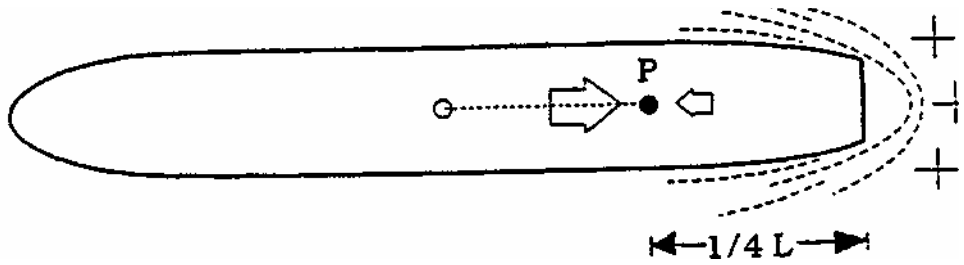

Figure 1-3 Pivot point - making sternway

Turning Levers and Moments

More important perhaps, than the position of the pivot point, is the effect its shifting nature has upon the many turning forces that can influence a ship. These are rudder force, transverse thrust, bow thrust, tug force, interactive forces and the forces of wind and tide.

Vessel Stopped

If we look at the ship used in our example, we can see that it has a length overall of 160 metres. It is stopped in the water and two tugs are secure fore and aft, on long lines, through centre leads.

If the tugs apply the same bollard pull of say 15 tonnes each, it is to a position 80m fore and aft of the pivot point.

Thus two equal turning levers and moments of 80m x 15t (1200tm) are created resulting in even lateral motion and no rate of turn.

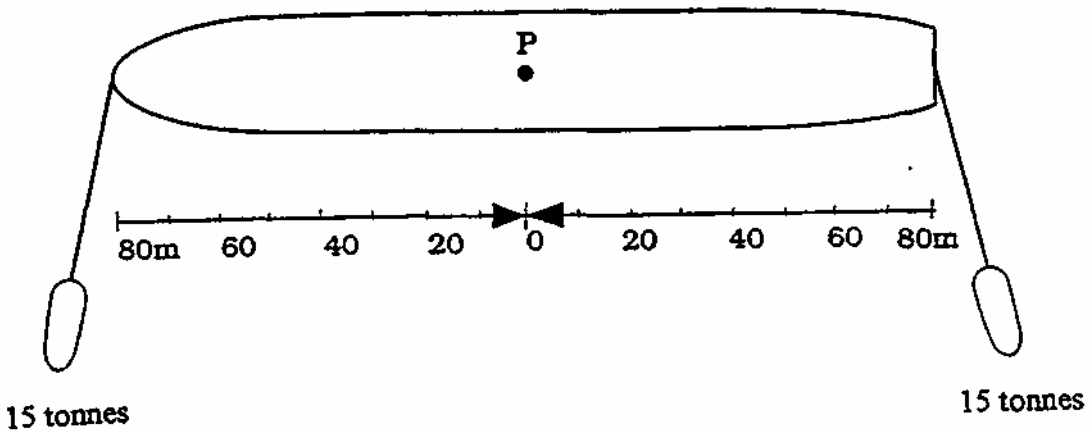

Figure 1-4 Turning levers - vessel stopped

Making Headway

With the ship making steady headway, however, the pivot point has shifted to a position 40m from the bow. The forward tug is now working on a very poor turning lever of 40m x 15t(600tm), whilst the after tug is working on an extremely good turning lever of 120m x 15 t (1800tm).

This results in a swing of the bow to starboard.

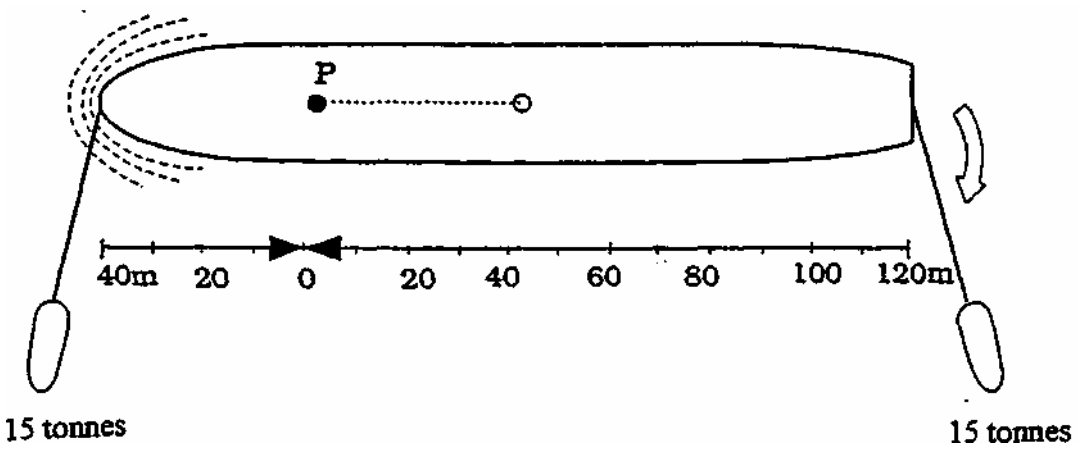

Figure 1-5 Turning Levers: Making Headway.

Making Sternway

The efficiency of the tugs will change totally when the ship by contrast makes sternway. Now the pivot point has moved aft to a position 40m from the stern. The forward tug is working on an excellent turning lever of 120m x 15t(1800tm) whilst the after tug has lost its efficiency to a reduced turning lever of 40m x 15t(600tm).

This now results in a swing of the bow to port.

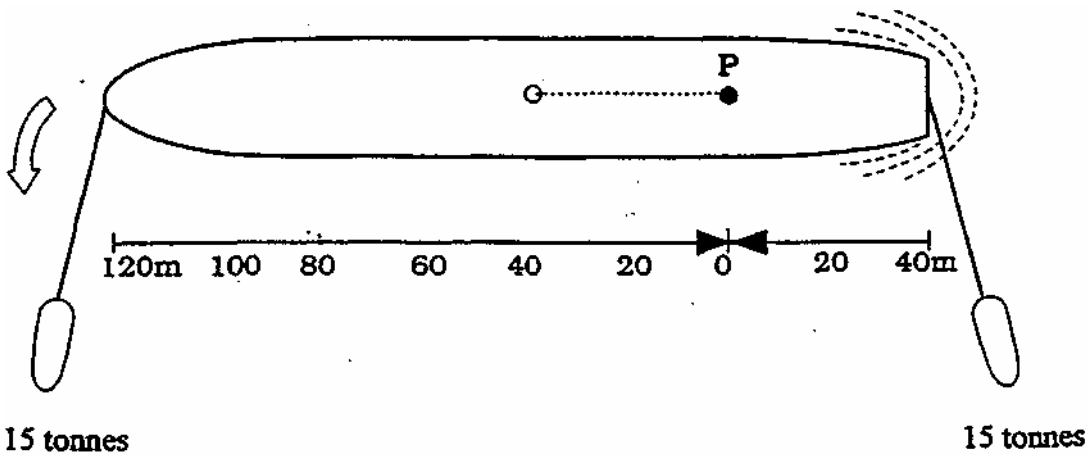

Figure 1-6 Turning Levers : Making Sternway

This simple method can also be used to obtain a basic knowledge of rudder, propeller and thruster efficiency, effect of wind, trim, interaction and tug positioning. In each Session that discusses those particular subject areas **and in practical exercises in the manned models,** it is the basis of all analysis!

CHAPTER TWO

SLOW SPEED CONTROL

General

The estimation of speed and knowing when to reduce speed when approaching a berth is not always easy and confidence can only come with experience. On very large ships, such as VLCCs, some guidance may be available from reliable doppler logs, but on many ships a doppler log is not available. In any case, total reliance upon instrumentation is not wise and is no substitute for experience. A pilot jumping from one ship to another, sometimes several during one duty period, has to develop a "feel" for the type of ship he boards and con "by the seat of his pants."

Speed

Many casualties are proven to occur as a direct result of excessive speed. Its effect can be insidious and a Master may find that he cannot keep up with events, which are happening too quickly. Effective control of the ship is slowly but inexorably lost. Against this are commercial pressures, on Masters and Pilots alike, for expedient passages and turn-round times. Whilst there are arguments either way, they are clearly not compatible and experience has shown that a fast pilot is not necessarily a good pilot - just lucky!

It is therefore desirable to balance a safe and effective speed of approach, against a realistic time scale. It would be unwise for example, to conduct a three mile run-in, at a speed of one knot. Three hours would stretch anyone's patience!

It is, of course, impossible to give exact figures, the requirement is dictated to a large degree by variable factors such as type of ship, tonnage, draft, shaft horse-power, wind and tide. Generally speaking, ships of less than 40,000 dwt are inclined to run their way off relatively quickly when engine speed is reduced, whereas larger ships carry their way for much larger distances. Speed must be brought firmly under control at greater distances from the berth.

It is usually obvious when the speed of a ship is too slow and can be easily overcome with a small increase in revolution; it is not always obvious when the speed is too high. The speed of a large ship, during an approach to a berth, particularly without tugs, can increase in an insidious manner and it is invariably difficult to reduce that speed in a short distance **and** keep control of the ship.

Loss of Control

If we look at Figure 2-1 we may illustrate some important points. In this example we have a medium size ship of 60,000 dwt, which we will assume is diesel powered with a single, right handed, fixed pitch propeller and single conventional rudder.

At one mile from the berth and running at an approach speed of 6 knots, it is well in excess of a dead slow speed of 3 knots. As the ship approaches the $^1/_2$ mile mark, speed is still over 3 knots, despite a rapid reduction in rpm. It is now necessary to stop the engine and thence sustain a prolonged period of increasing stern power in order to stop the ship in time.

During this substantial time interval the ship is at the whim of transverse thrust, wind, tide, bank effect or shallow water effect. It is effectively "out of control" in so much that we can only stand back and hope that it will do what we want. This is literally hit or miss stuff and the more we can reduce this prolonged period of increasing stern power and thus retain control, so much the better!

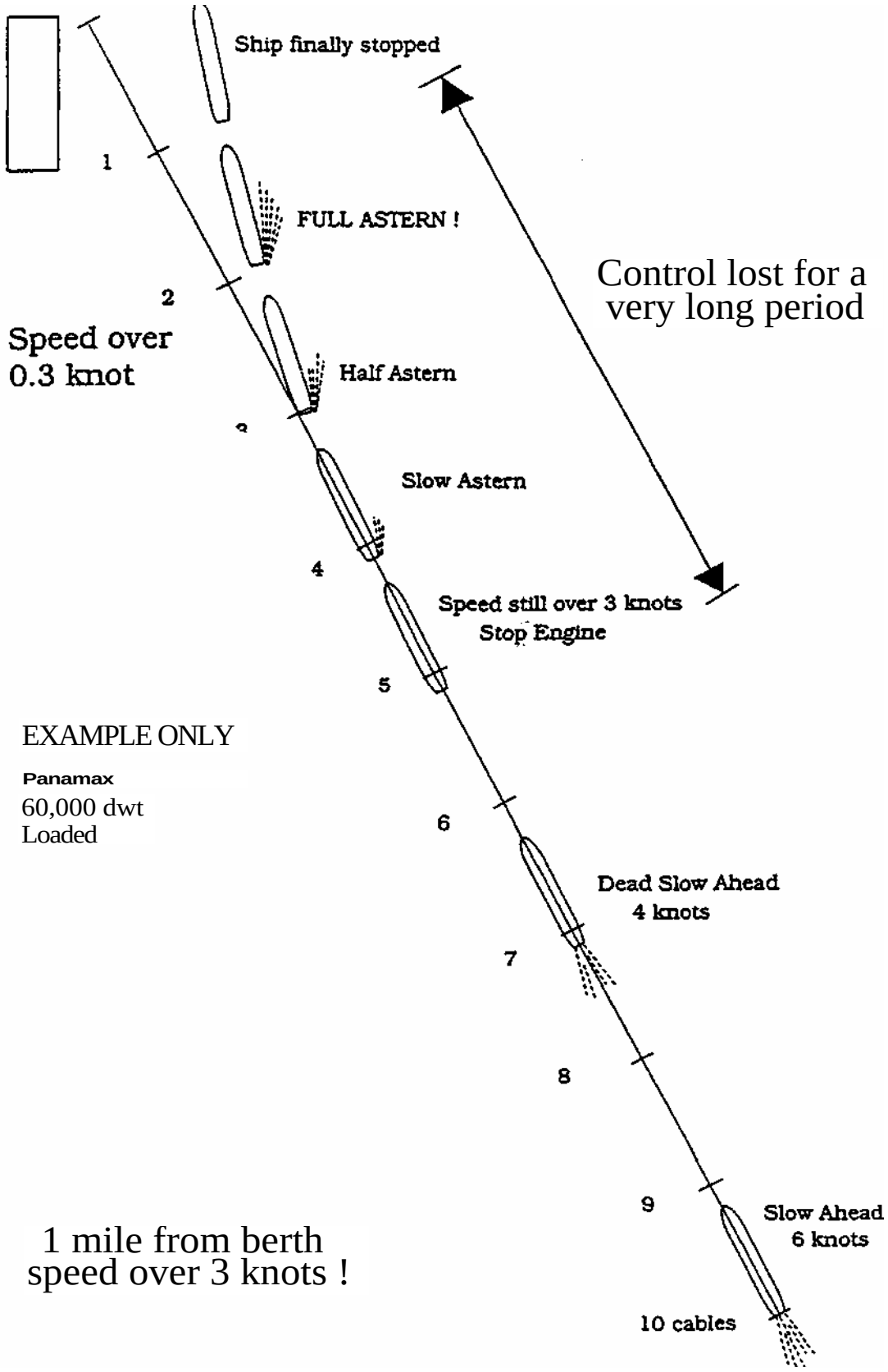

Figure 2-1 Loss of Slow Speed Control

Slow Speed Control

In the Figure 2-2 we see the same ship, again one mile from a berth but this time at its dead slow speed of 3 knots or less. Before it approaches the 1/2 mile mark it may also be necessary to stop the engine to further reduce excessive headway and allow plenty of time to adjust the ship's approach and positioning for the berth.
Now the biggest worry is the loss of rudder effectiveness at very slow speeds, particularly without any tug assistance and the fear that we cannot keep control of the ship's head. For a variety of reasons such as poor steering, wind, shallow water or directional instability, the bow may well begin to develop an unwanted sheer, alternatively it may be desirable to adjust the attitude of approach. Control is best achieved by applying full rudder and utilizing a short but substantial burst of engine power. This is the "Kick Ahead" technique.

There are however, several pitfalls to avoid, which can all lead to an excessive increase in speed, thus ruining all the previous efforts to control it.

Kick Ahead. Rudder Angle.

If a kick ahead is to be utilized, it is essential that the rudder is seen to be 'Hard Over' before the power is applied. Whilst this ensures a maximum rudder turning force, it also "puts the brake on" some of the residual speed, directly resulting from increased power. With the helm at anything less, such as 15° or 20°, less rudder force is applied at the cost of increasing forward speed. It is also essential that the power is taken off before the rudder is returned to amidships or angles of less than 35°. Failure to do this will result in a brief, but important interval, during which time most or all of the power applied is again being used to increase speed.

Kick Ahead - Duration

The duration of a kick ahead should be as short as possible. Prolonged use of the power, after the initial steering effect has ceased, will only result in a violent sheer and an unwanted build up of speed. This will result in the need for yet another kick ahead to rectify the situation. Due to the scaling factor this is particularly important with scale models, as the effect is several seconds faster than a real ship. As soon as the revolutions reach a maximum, the power must be taken off.

Kick Ahead - Power.

It is difficult to quantify the amount of power to apply for a kick ahead, as it very much depends on the size of ship and the needs of the ship handler at the time. It is important, however, to appreciate the ratio of Shaft Horse Power(shp) to Tonnage(dwt) that exists from ship to ship.

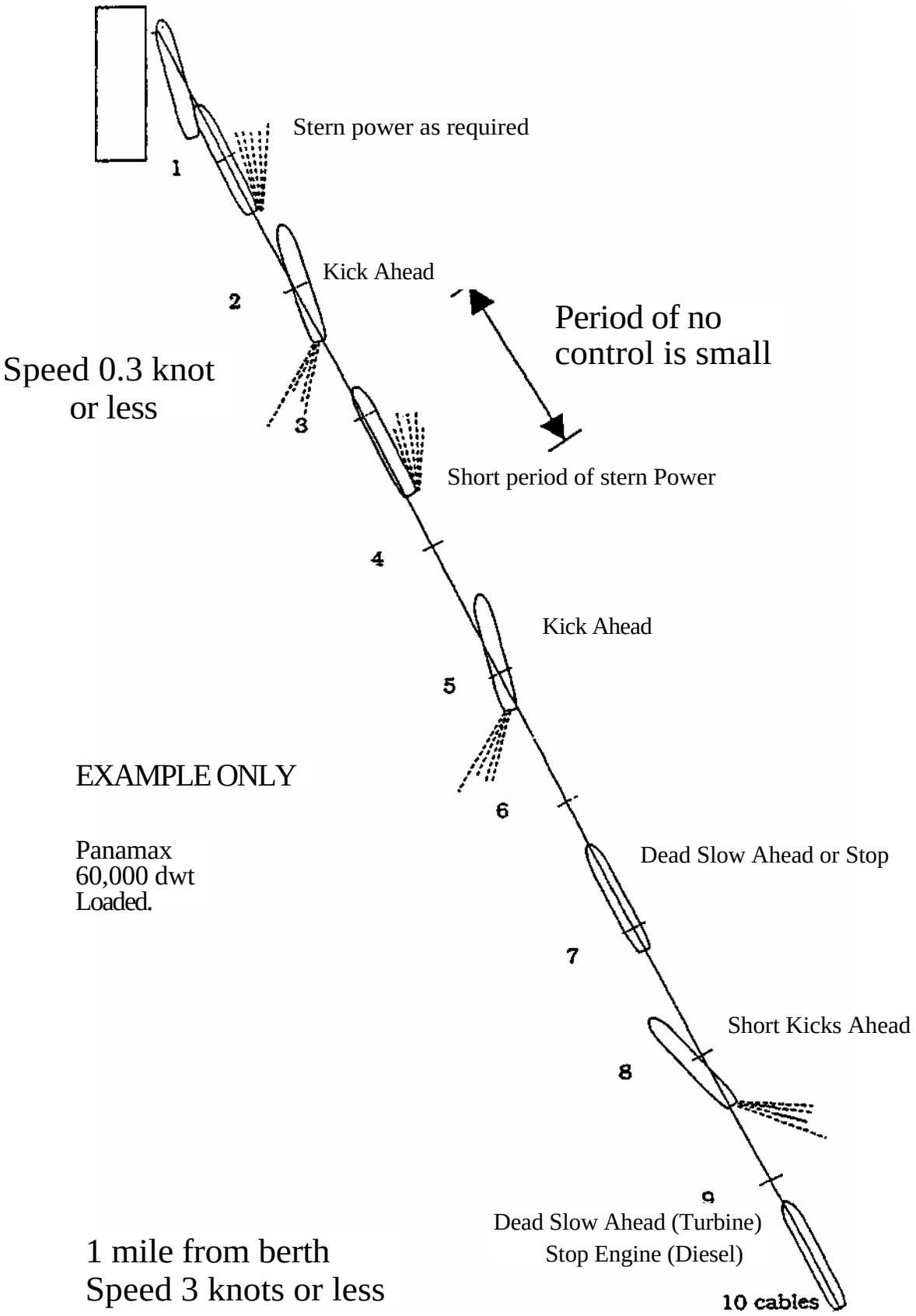

Figure 2-2 Slow Speed Control

If we look at a table of new tonnages from a Japanese ship yard, (Figure 2-3} there are enormous differences with increasing ship size. The cargo ship of 20,000 dwt, has a substantial 17,000 shp; the tanker of 60,000 dwt, by contrast, has only 15,000 shp. The VLCC of 250,000 dwt, which is four times larger than the tanker, has only twice the engine power at 31,000 shp.

In practical terms it is noticeable that a kick of slow ahead may be very effective on a smaller ship, but extremely inadequate for a VLCC, when half or even full power may be needed to achieve any result. This, of course, does not encompass that peculiar breed of ship that for some reason is built with speeds of 6 or 8 knots at dead slow ahead!

SHIP TYPE	DWT tonnes	LBP	B	DRAFT	ENGINE	SHP
TANKERS	380,000	355	64	23	TURBINE	45,000
	250,000	320	52	21	TURBINE	31,000
TANKERS	120,000	252	38	17	DIESEL	23,000
	100,000	251	38	15	DIESEL	21,000
	80,000	237	36	12	DIESEL	20,000
	60,000	219	32	12	DIESEL	15.000
BULK CARGO	190,000	285	50	18	DIESEL	24,000
	120,000	248	38	18	DIESEL	23,000
	80,000	237	36	12	DIESEL	17,000
	60,000	218	32	12	DIESEL	15,000
	30.000	163	24	11	DIESEL	13,000
	20,000	146	22	9	DIESEL	9.000
CARGO	20,000	157	26	10	DIESEL	17.000
	12,000	146	22	10	DIESEL	11,000
CAR CARRIER	12,500	180	32	9	DIESEL	10,400
CONTAINER (23 knots)						
TEU 1940	29,000	196	32	11	DIESEL	26,200
TEU 839	23,000	213	30	9	DIESEL	30,000

Figure 2-3 Shaft Horse Power

Type of Propulsion unit.

The type of propulsion unit is also an important factor to consider when utilizing the kick ahead. Diesel powered ships are generally very good, with the power coming in quickly and effectively. The number of engine air starts, however, varies considerably from ship to ship. Some may be good and have an unlimited start-up capacity, others may have only two air bottles which at very best might give 10 to 12 starts each. Far worse cases are frequently experienced, with the infamous words "only one start left pilot" ruining what was otherwise a good day!

Working with a Turbine ship is very different, in so much as the turbine is slow to come on line and build up power. This is not particularly useful for kicks ahead. When slowing down, but still wishing to keep control of heading, it is better, if conditions allow, to leave the turbine on dead slow for as long as possible rather than stop the engine. Some turbines can be run at minimum RPM ahead which is even more effective. The turbine is thus on line and instantly available for use.

Summary

Without the assistance of tugs to control both heading and speed, the correct use of the kick ahead is the single most effective means of keeping control of heading and speed particularly with directionally unstable ships. Clearly the ship must be stopped sometime and indeed several kicks ahead, no matter how carefully applied, will result in a slow build up of speed. This can be carefully balanced with short periods of modest stern power thereby just easing the speed back, or even stopping the ship entirely if so desired. The Master or Pilot is thus able to enjoy far longer periods of total control which would not be possible with the ship running at higher speeds.

TRANSVERSE THRUST

Ahead Movement of the Propeller

The effect of transverse thrust whilst making an ahead movement is arguably less worrying than that of an astern movement, perhaps because the result is less noticeable. For those that have seen the video "Ship Handling 2" it is a subject very thoroughly covered. It is sufficient to summarize the main factors which are evident with an ahead movement of a right handed propeller.

(a) The helical discharge from the propeller creates a larger pressure on the port side of the rudder.

(b) A slight upward flow from the hull into the propeller area puts slightly more pressure onto the down sweeping propeller blades.

(c) It was evident during the tests that the speed or flow of water into the propeller area is uneven in velocity.

The net result is a tendency for a right handed propeller to give a small swing to port when running ahead. Whilst this may be noticeable in calm and near perfect conditions it is easily influenced by other likely factors such as wind, current, shallow water, tugs, rudder errors and so on.

Astern Movement of the Propeller

The importance of transverse thrust when using an astern movement is of much greater significance to the ship handler. The helical discharge, or flow, from a right handed propeller working astern splits and passes forward towards either side of the hull. In doing so it behaves quite differently. On the port quarter it is inclined down and away from the hull whilst on the starboard quarter it is directed up and on to the hull. This flow of water striking the starboard quarter can be a substantial force in tonnes that is capable of swinging the stern to port giving the classic 'Kick Round' or 'Cut' of the bow to starboard.

Force in Tonnes

Mainly a function of water flow, the transverse thrust can be increased or decreased by varying propeller rpm. This in turn varies the magnitude of the force in tonnes applied to the quarter and it can be viewed clinically as one of the forces available to the ship handler in much the same manner as rudder, tug or bow thruster forces. It is, however, a weak force and can be roughly calculated if the shp of a particular ship is known.
For example let us take a ship of 80,000 dwt with a full ahead of 20,000 shp. If full astern is only 50% of this then it only has a maximum of 10,000 shp astern.

For practical purposes it can be taken as a rough guide that transverse thrust is only 5 to 10% of the applied stern power therefore in this case at best a force of 1,000 shp or 10 tonnes. (100 shp appx 1 tonne)

Whilst shaft horsepower is an important factor in determining the magnitude of transverse thrust and how much a ship will cut when going astern a further consideration must be the position of the pivot point.

Pivot Point and Transverse Thrust

Vessel Making Headway

Looking at another ship, this time of 26,000 dwt with a maximum of 6,000 shp astern, it can be seen that shp relates to approximately 6 tonnes of force on the starboard quarter. When the ship is making slow enough headway for the propeller wash to reach the hull, it is acting upon a pivot point that is forward and thus a turning lever of 110 metres. This creates a substantial turning moment of 660 tonne-metres.

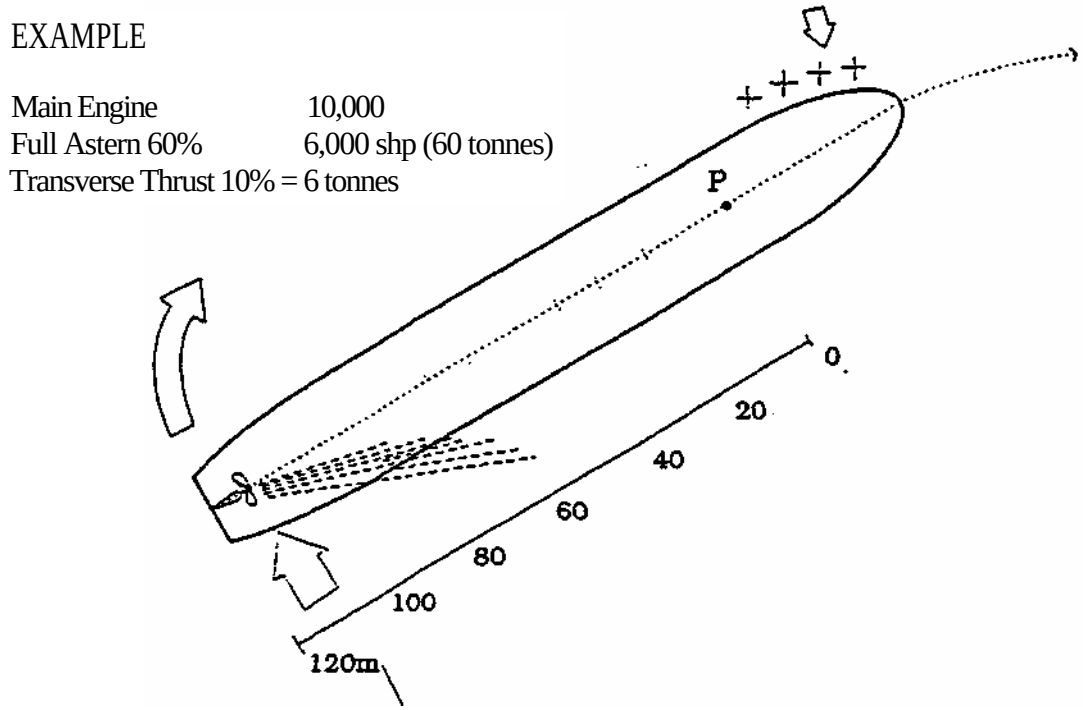

6 tonnes x 110 metres = 660 tm

Figure 2-4 Transverse thrust - vessel making headway

The forward speed of the ship must be considered because at higher speeds the full force of propeller wash will not be striking the quarter. As the ship progressively comes down to lower speeds and with the pivot point still forward, the magnitude of transverse thrust will slowly increase reaching its peak just prior to the ship being completely stopped. It is an unfortunate fact of life that at the slower speeds approaching a berth, if stern power is applied, transverse thrust is likely to be at its maximum!

Vessel Making Sternway

With the same ship making sternway the pivot point will now move to a new position somewhere aft of amidships. With the propeller working astern the flow of water on to the starboard quarter is still maintaining its magnitude as a force of 6 tonnes but is now applied to a reduced turning lever of 40 metres. Unlike the situation with headway we now have a reduced turning moment of 240 tonne-metres with sternway. In the first instance this may not seem strikingly important. It must be remembered, however, that transverse thrust may be a poor force in comparison to other forces such as wind and tide. With the example of sternway, a wind acting forward of the pivot force may be strong enough to overcome that of transverse thrust. This will be investigated more thoroughly in a later section concerning effect of wind.

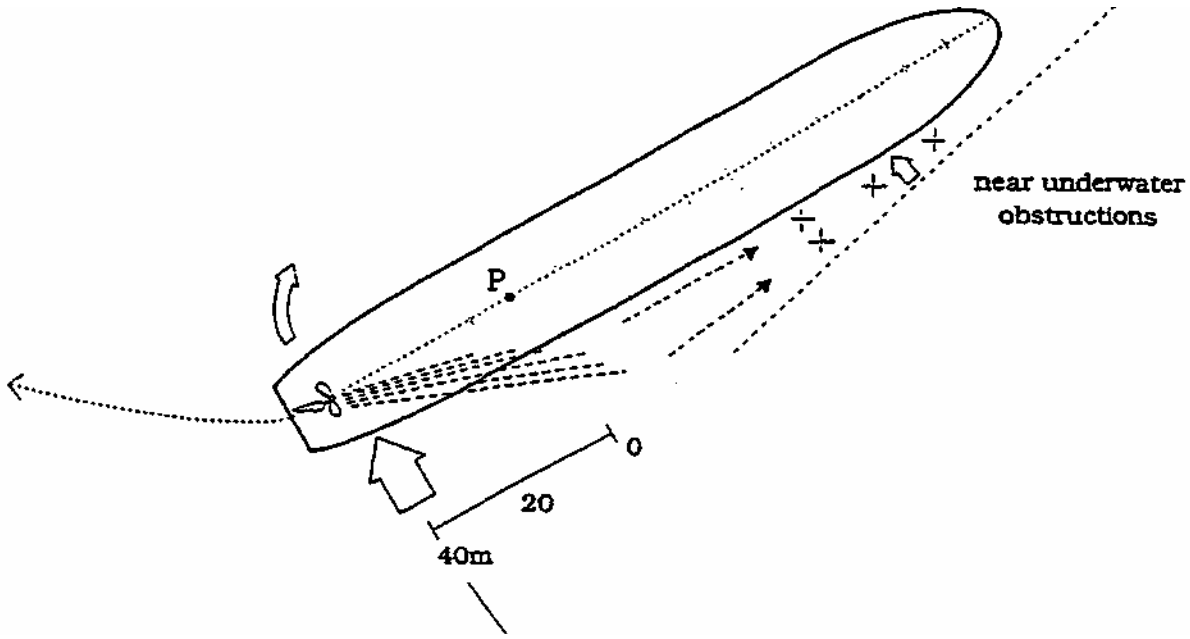

6 tonnes x 40 metres = 240 tm

Figure 2-5 Transverse thrust - vessel making sternway

Wedge Effect

It is sometimes apparent that a ship when using stern power in the close proximity of solid jetties, banks or shallow water will "cut" the wrong way. There are two possible causes for this occurrence and only a pilot's local knowledge is likely to pinpoint them.

The first is a phenomenon known as "Wedge Effect". This occurs when the ship with a fixed pitch right handed propeller has a solid jetty or other vertical obstruction close to its starboard side. If excessive stern power is used, the wash created is forced forward between the ship and the obstruction. If we again look at the figure 2-5, it can be seen that if the flow of water is restricted then a force is exerted on the ship forward of the pivot point. This is particularly apparent when the ship is stopped or making sternway. The force may be of sufficient strength to kill normal transverse thrust and sometimes generate a swing of the bow to port. It will be worse if the ship has a bow-in aspect or is land locked forward of the berth, thus increasing the entrapment of water flow. Whilst a disadvantage in some respects it can be turned to advantage in some parts of the world. Using the "wedge effect", a ship can be lifted bodily off a solid jetty when backing out avoiding dragging the bow along the dock side.

The second possible cause of a "cut" the wrong way may be attributed to the vicinity of shallow water. The flow of water from the fixed pitch right handed propeller working astern as we have seen, is up and on to the starboard quarter, but down and away from the port quarter. If the ship has a small under keel clearance it is possible that, in addition to such factors as cavitation and restricted flow into the propeller, the flow of water on the port side is being deflected off the bottom and back on to the hull. This clearly gives some prior indication that the response of the ship may be unpredictable in shallow water and, once again, the bow may swing the wrong way.

Alternative Design Features

Throughout these examples we have, for practical purposes, adopted a simplistic approach by only considering a fixed pitch right handed propeller. There are of course ships with fixed pitch left handed propellers, propeller tunnels and controllable pitch propellers, the latter becoming increasingly more common.

Left Handed Propeller

With a left handed propeller it is simply a case of remembering that the results of transverse thrust are the opposite in so much that the flow of water from the propeller working astern is up and on to the port quarter and not the starboard quarter. In basic terms the "cut" of the bow is therefore to port when working the propeller astern.

Controllable Pitch Propeller

The controllable pitch propeller rotates constantly in the same direction no matter what movement is demanded of it. Viewed from astern, a clockwise rotating propeller is still rotating clockwise with stern power, only the pitch angle of the blades has changed. This gives the same effect as a conventional fixed pitch left handed propeller, which is also rotating clockwise when going astern so the bow will swing to port. Similarly if a variable pitch propeller constantly rotates counter clockwise when viewed from astern, this will be the same as a fixed pitch right handed propeller which is also rotating counter clockwise during an astern movement, the bow will thus swing to starboard. (See chapter 9 - Special propellers and rudders).

Shrouds

For economical purposes, propellers in shrouds or tunnels are growing in number, even on large VLCCs. This ultimately has some bearing upon transverse thrust because they alter significantly the flow of water exiting the propeller area. It may be more concentrated and is likely to impose an equal thrust upon both sides of the hull thus resulting in little or no transverse thrust.

Hull Design

Finally, hull design features may also play a significant part in altering this simplistic and traditional concept of transverse thrust. It is possible, for example, because of a different hull shape or length to breadth ratio, for the point of impact of water flow to be much closer to the position of the pivot point when going astern. In such a case, transverse thrust, although relatively pronounced with headway, may be surprisingly weak with sternway, to the extent that the bow may literally fall off either way, particularly if influenced by wind or shallow water.

CHAPTER THREE

TURNING

General

It is quite clear from the results of numerous casualty investigations that a failure to turn a ship in the available sea room ranks high amongst the causes of many accidents, some literally terminal. This can be for a number of reasons such as mechanical failure, human error or adverse weather conditions. In the category of human error, excessive speed whilst attempting to turn is once again a major source of failure.

The video 'Ship Handling 1' which concerns itself with the subject of turning, illustrates many useful points. We need to look at some aspects of the video from a more basic viewpoint which will be of greater assistance to us in the practical world.

Rudder Force and Pivot Point

We will start with a ship of 67,000 t displacement, stopped dead in the water assuming even keel, calm conditions and no tide. With the rudder hard to starboard, an ahead movement is now applied and for the moment it is academic whether it is dead slow, slow, half or full. This we can refer to simply as The
Rudder Force'. This will be attempting to both turn the ship and drive it forward.
Forward movement is initially resisted because of the inertia of the ship while the turn, which is working at the end of the ship on a good lever, sets in slightly earlier. This results in a pivot point which is initially well forward and approximately 1/8L (P) from the bow. The importance of this is absolutely vital because at this stage, with the ship just beginning to make headway and the pivot point well forward, we have the optimum rudder force. It will never be better!

When the ship thereafter begins to build up speed, the water resistance ahead of the ship balances forward power and pushes the pivot point back a further 1/4 L (see session 1). At a steady speed, whilst turning, the final position of the pivot point will now be approximately 1/3 L (PP) from the bow. With the turning lever thus reduced the rudder force has now become progressively less efficient.

Lateral Resistance

As a ship commences to turn and thereafter for the duration of a turn, the ship is sliding sideways through the water. This results in a large build up of water resistance which continually opposes the rudder force and we can refer to as 'Lateral Resistance '. The balance between the rudder force and the lateral resistance plays a crucial part in shaping all turning circles. (Figure 3-1).

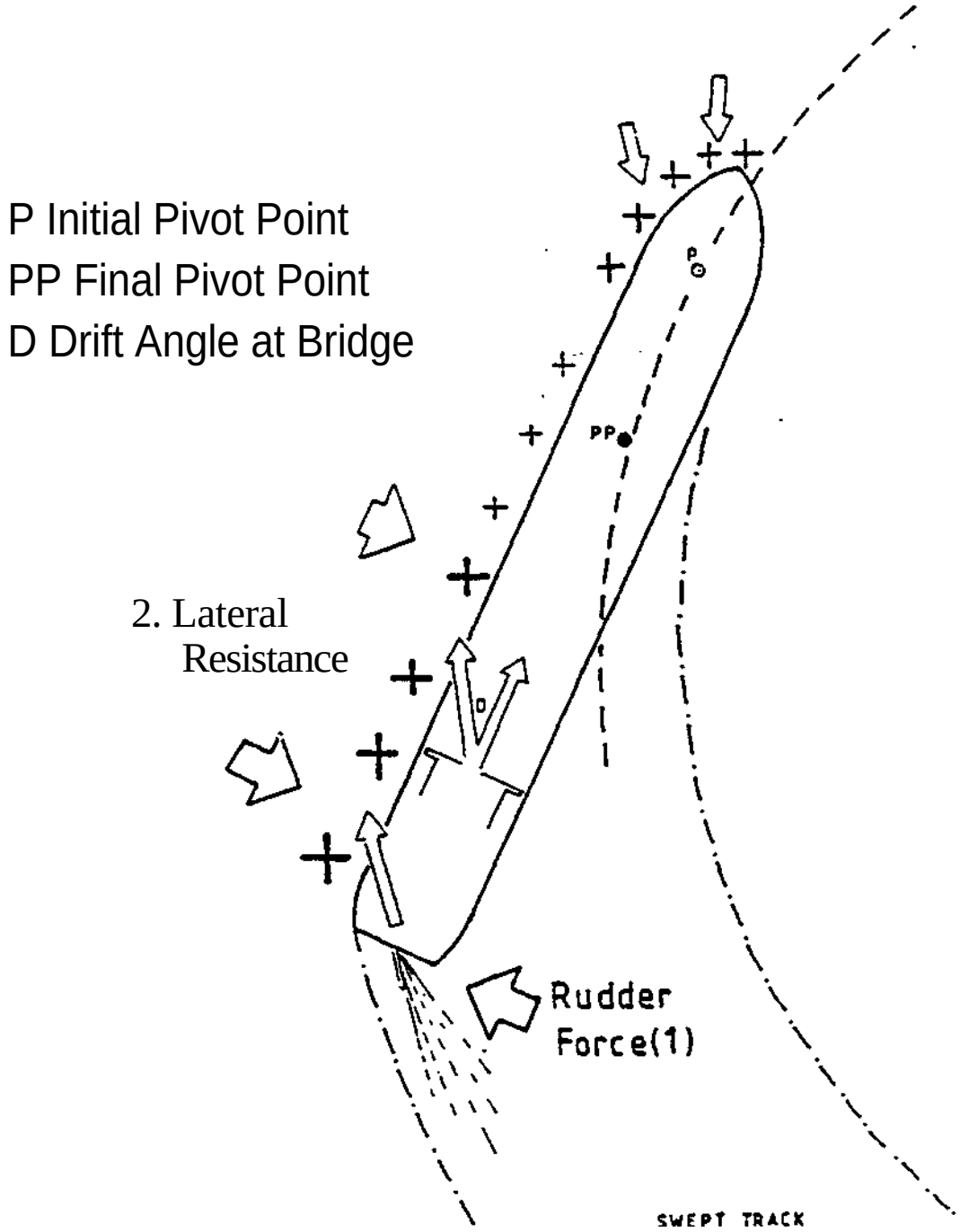

Figure 3-1 Standing turn, lateral resistance.

Normal Turns

If for example our ship of 67,000 t displacement enters and continues a turn at a constant rpm for slow ahead, both forces balance to give a turning circle as shown in figure 3-2. The advance and transfer can be measured from the scale for both 20° and 35° turns. By comparison, looking at the same ship conducting a turn at a constant rpm for full ahead, figure 3-3, it may be surprising to note that the turning circles are virtually identical to the slow ahead turn.

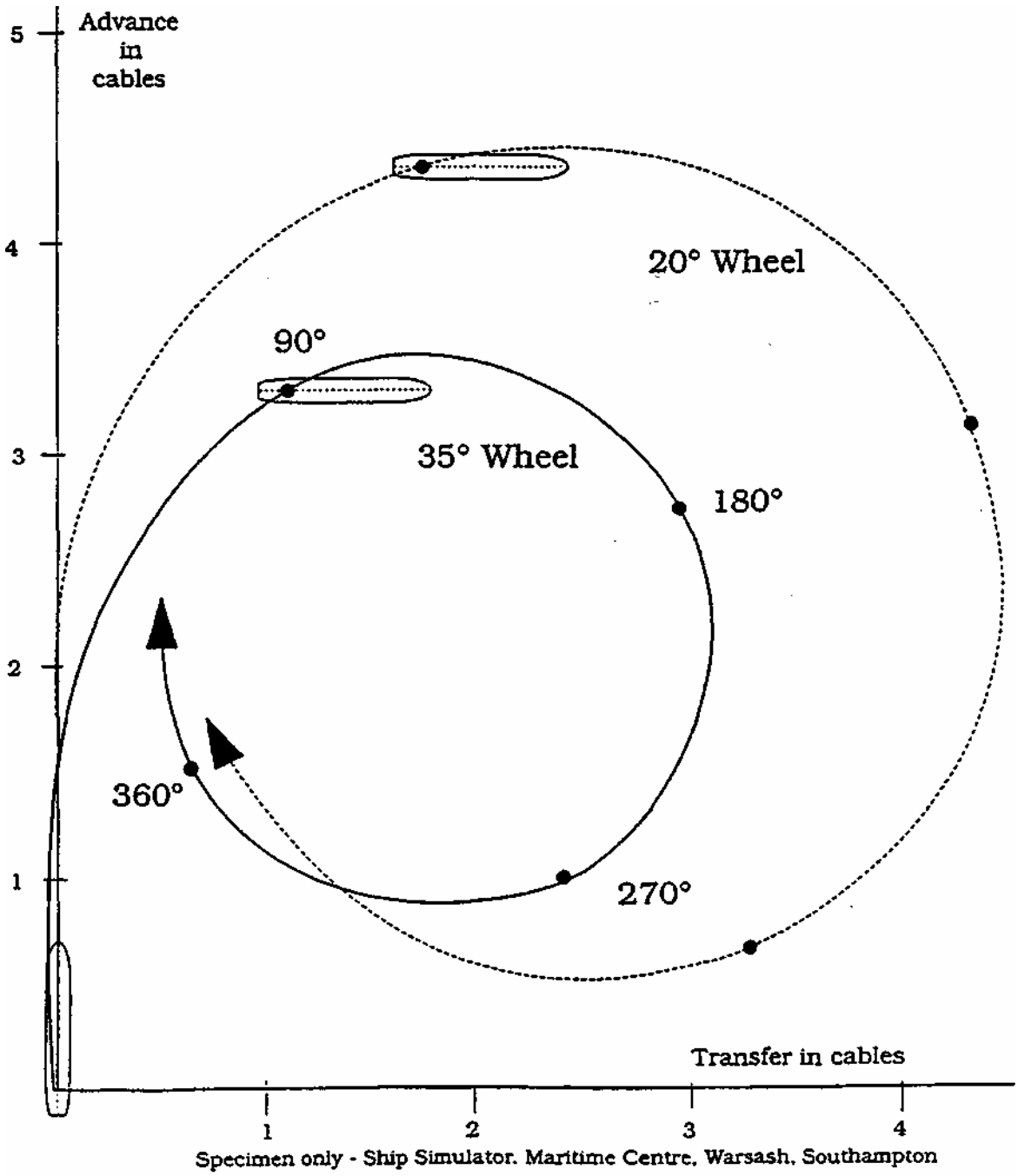

166m tanker 'Morlone'
Loaded in deep water
Approach speed 5.8 knots

Figure 3-2 Slow Ahead turns to starboard

Standing Turns and Kicks Ahead

Standing Turns and Kicks Ahead can only be achieved by altering the balance between lateral resistance and rudder force, reducing the former to a minimum and then exploiting the latter to its full potential. To do this to best effect it is first necessary to take the ship's speed right down to the equivalent of dead slow or less. With the speed thus reduced, the flow of water along the ships side and therefore lateral resistance is minimal allowing us to use the rudder force to greatest effect. This is best illustrated with the example of a Standing Turn in figure 3-4. In this case the same ship of 67,0001 displacement is stopped in the water with the rudder at port 35°. With slow ahead the ship commences the turn and has completed 90° of that turn with an advance of only $1^1/_4$cables or $1^1/_2$ ship lengths. This is considerably tighter than the normal turn at constant slow ahead rpm, which is included for comparison in figure 3-4 by the pecked line.

After 90,° however, care should exercised as the speed is now building up. As it does so, the lateral resistance and rudder force are returning to normal and the ship is reverting to its normal turning circle. This could be illustrated by over laying the two turning circles in figure 3-4 as demonstrated in the classroom lecture. The degree of speed reduction prior to the turn is of critical importance to tightening the turn. Dead slow or less is the optimum and anything faster will incur a loss of turning ability.

Speed during a Turn

The speed of a ship during a normal turn is interesting in so much that it suffers a marked reduction. As the ship is sliding sideways and ahead, the exposed side experiences a substantial increase in water resistance, which in turn acts as a brake. The ship may experience a 30 to 50% speed loss and it is a useful feature in many areas of ship handling where a sharp speed reduction is required. The ship in figure 3-3, for example, entered the turn at a full speed of 11.6 knots. Once it has settled into the turn, the speed will be reduced to about 8 knots. This is useful in a Williamson Turn, allowing it to be conducted at full speed in the interests of time, yet knowing that the turn alone will take a great deal of the speed off. Similarly many pilots will come up to an SBM with one and sometimes two 90° turns in the approach, to ensure that the speed is brought down. In short, it is a useful and very effective method of speed reduction to fall back on, provided there is sufficient sea room.

Shallow Water

So far we have only considered a ship manoeuvring in deep water. If, however, the ship is operating in shallow water it is likely to have considerable effect upon handling, in particular its turning ability. As a rough guide it can be assumed that a ship may experience shallow water effect when the depth of water is less than twice the draft, i.e. the under keel clearance is less than the draft itself. Serious cases of shallow water problems have however been experienced with larger under water clearances, especially at high speeds, sometimes with dire consequences!

To look more closely at the problem we will return to the example ship, which is fully loaded and on even keel with a draft of 11.6 metres. This vessel is commencing a full starboard rudder turn, with a three metre under keel clearance. Looking at the ship from astern (figure 3-6), it can be seen, as the stern of the ship commences to sweep to port, that water pressure is building up along the port side, abaft of the pivot point due to the restriction under the keel.

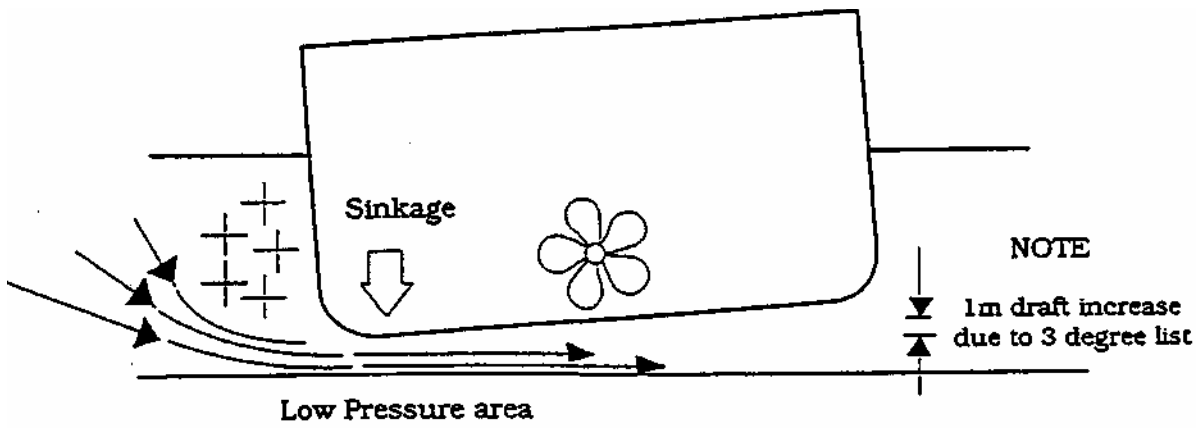

Figure 3-6 Shallow water (water pressure)

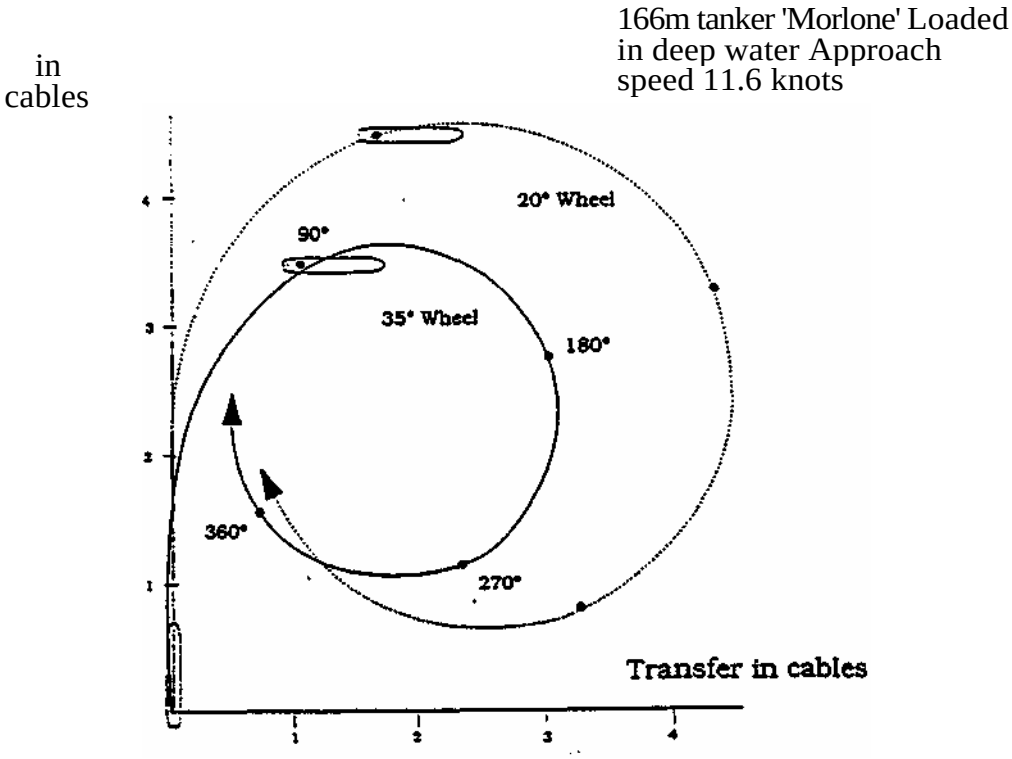

Figure 3-3 Full Ahead turns to starboard

The reasons for this are due to the fact that although we have entered the turn with a much larger rudder force it is also with a higher speed and therefore higher lateral resistance. In any turn at constant rpm, rudder force and lateral resistance are always achieving the same balance thereby assuring that each turning circle is approximately the same in terms of advance and transfer. The only thing that is saved by entering a turn at higher speeds is time. It is the **rate of turn** which varies. Whilst this can be critical in cases, when time is of paramount importance, such as conducting a large turn across a strong tide or taking the ship through a Williamson Turn, it does not improve turning ability.

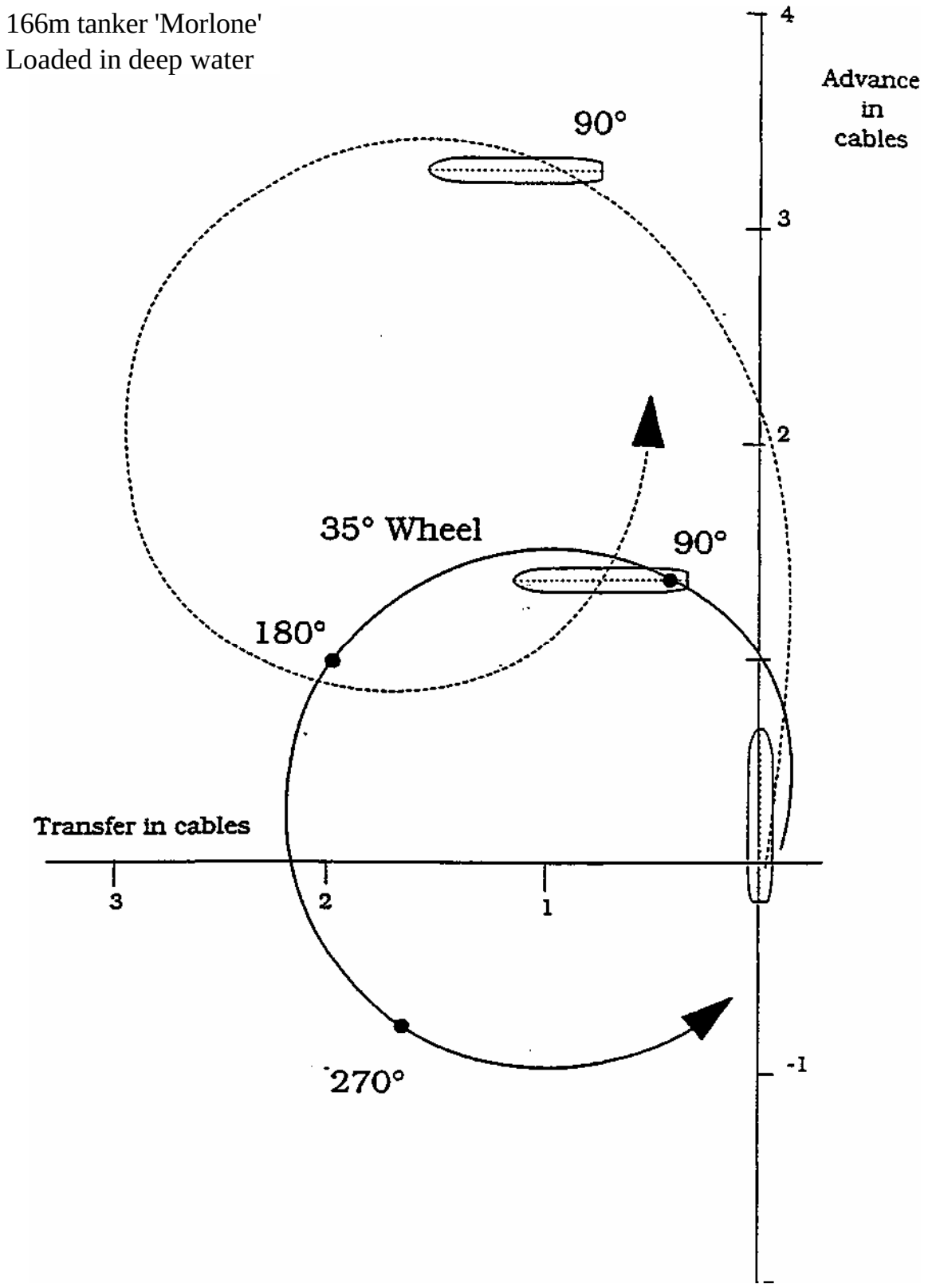

Specimen only - Ship Simulator. Maritime Centre, Warsash, Southampton

Figure 3-4 Standing turn from stopped

If we now look at this in plan view (figure 3-7), it can be seen that this will seriously upset the previous balance between lateral resistance and rudder force and the position of the pivot point.

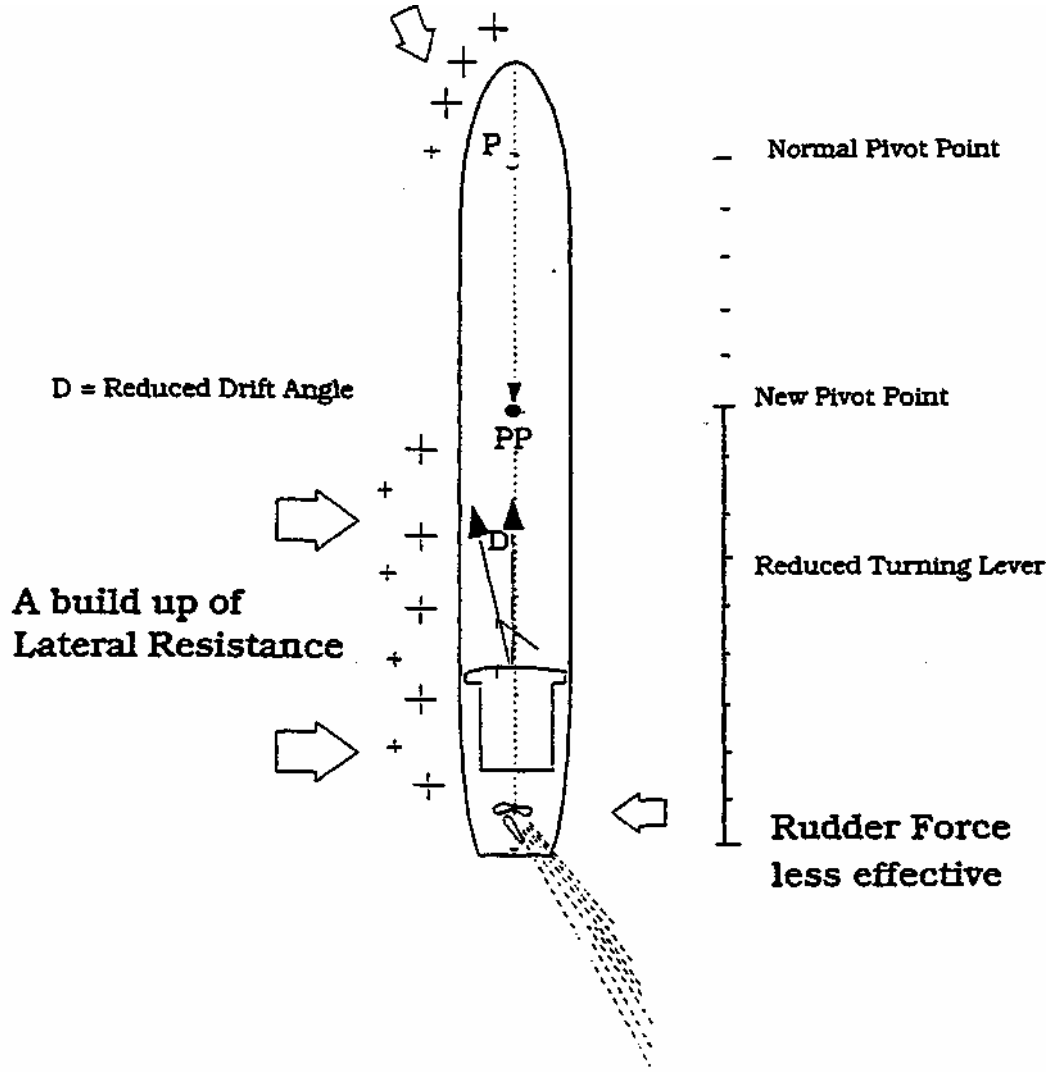

Figure 3-7 Shallow Water (pivot point)

In the first instance the rudder force now has to overcome a much larger lateral resistance and is therefore considerably less efficient. A similar thing is happening at the bow, because of the reduced under keel clearance, water which would normally pass under the ship is now restricted and there is a build up of pressure, both ahead of the ship and on the port bow. This now upsets the balance between the ships forward momentum and longitudinal resistance (see chapter 1) and pushes the pivot point back from P to PP. With the steering, or rudder lever, also reduced the ship is rapidly losing the rudder efficiency enjoyed in deep water.

In figure 3-8 the deep and shallow water turns are over laid and clearly illustrate the vast differences that exist between the two. If this is encountered without warning, perhaps during a critical turn, it is an experience never forgotten!

166m tanker 'Morlone'
Loaded at slow ahead

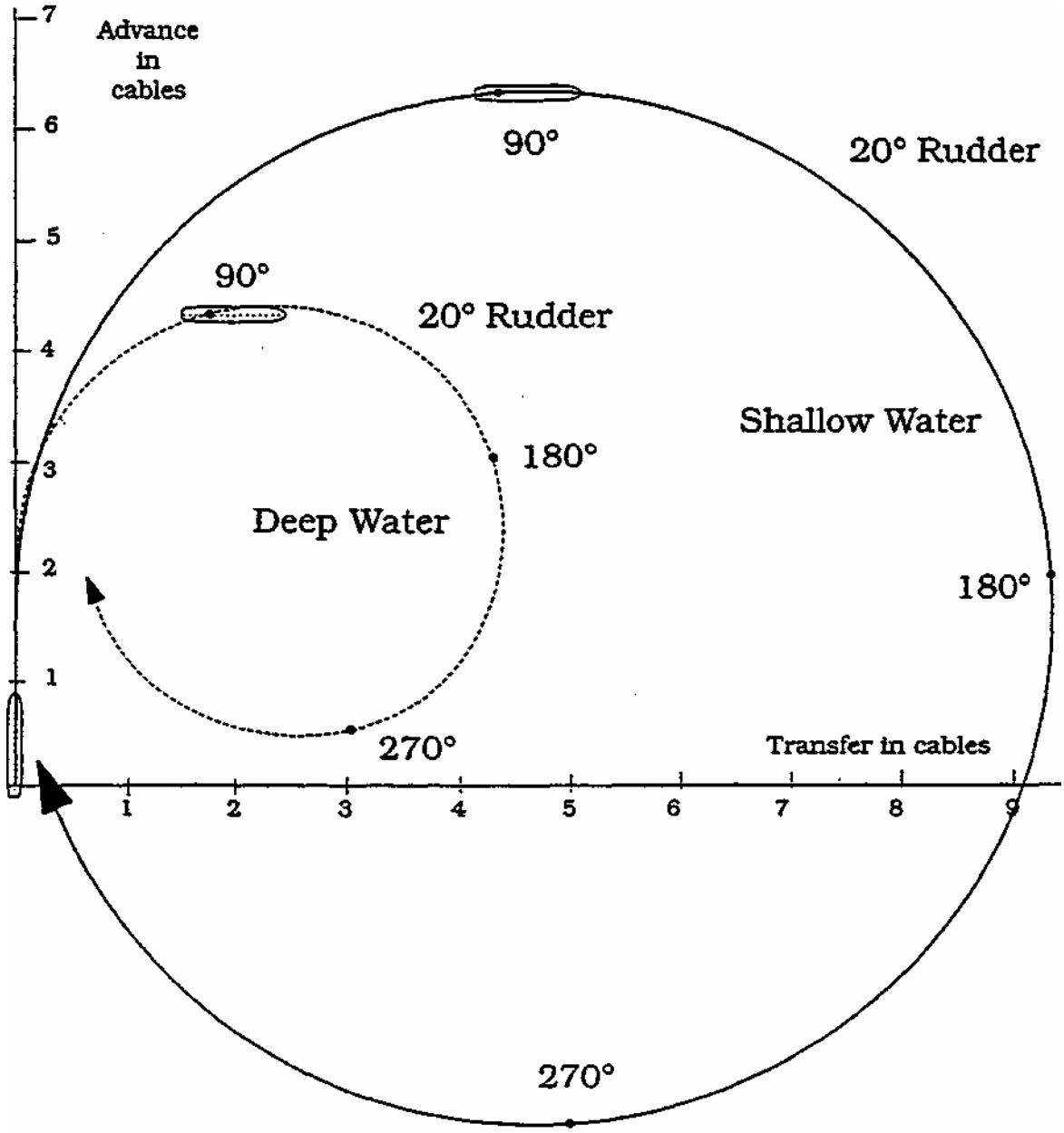

Figure 3-8 Effect of shallow water (turning circle)

Draft in a Turn

Finally it should be noted that a ship manoeuvring through a large turn and influenced by shallow water may also experience an increase in draft due to list. Returning to figure 3-6 it can be seen that if the under keel clearance is poor the increased pressure along the port side will also result in an increased flow of water under the ship. To avoid getting bogged down in theoretical complications it is sufficient to say that it results in a low pressure under the ship and therefore some degree of sinkage. This may be more evident with a large high sided ferry or a container ship, particularly if the ship is proceeding at high speed and already experiencing a small list due to the turn. The amount of sinkage, in this case 1 metre, can be surprising and should not be forgotten when turning at speed in shallow water.

These effects are further considered in Chapter 6 Interaction.

CHAPTER 4

THE EFFECT OF WIND

General

The ship handler faces many problems but there is none more frequently experienced and less understood than the effect of wind. All too often when slowing down after a river passage, whilst entering locks and during berthing, it can create a major difficulty. With or without tugs, if the problem has not been thought out in advance, or if it is not understood how the ship will behave in the wind, the operation can get out of control extremely quickly. Needless to say, with no tug assistance, it is wise to get this area of ship handling right first time and also appreciate what the limits are.

It is frequently stated by many a Master that 'the large funnel right aft, acts like a huge sail'. Whilst this is to some extent true, it simply does not explain everything satisfactorily. It is important to look at the problem more closely.

Vessel Stopped

Looking at figure 4-1 we have a ship on even keel, stopped dead in the water. It has the familiar all aft accommodation and we will assume, at this stage, that the wind is roughly on the beam. Whilst the large area of superstructure and funnel offer a considerable cross section to the wind, it is also necessary to take into account the area of freeboard from forward of the bridge to the bow. On a VLCC this could be an area as long as 250 x 10 metres.

The centre of effort of the wind (W) is thus acting upon the combination of these two areas and is much further forward than is sometimes expected. This now needs to be compared with the under water profile of the ship and the position of the pivot point (P) as discussed previously. With the ship initially stopped in the water this was seen to be close to amidships. The centre of effort of the wind (W) and the pivot point (P) are thus quite close together and therefore do not create a turning influence upon the ship. Although it will vary slightly from ship to ship, generally speaking most will lay stopped with the wind just forward or just abaft the beam.

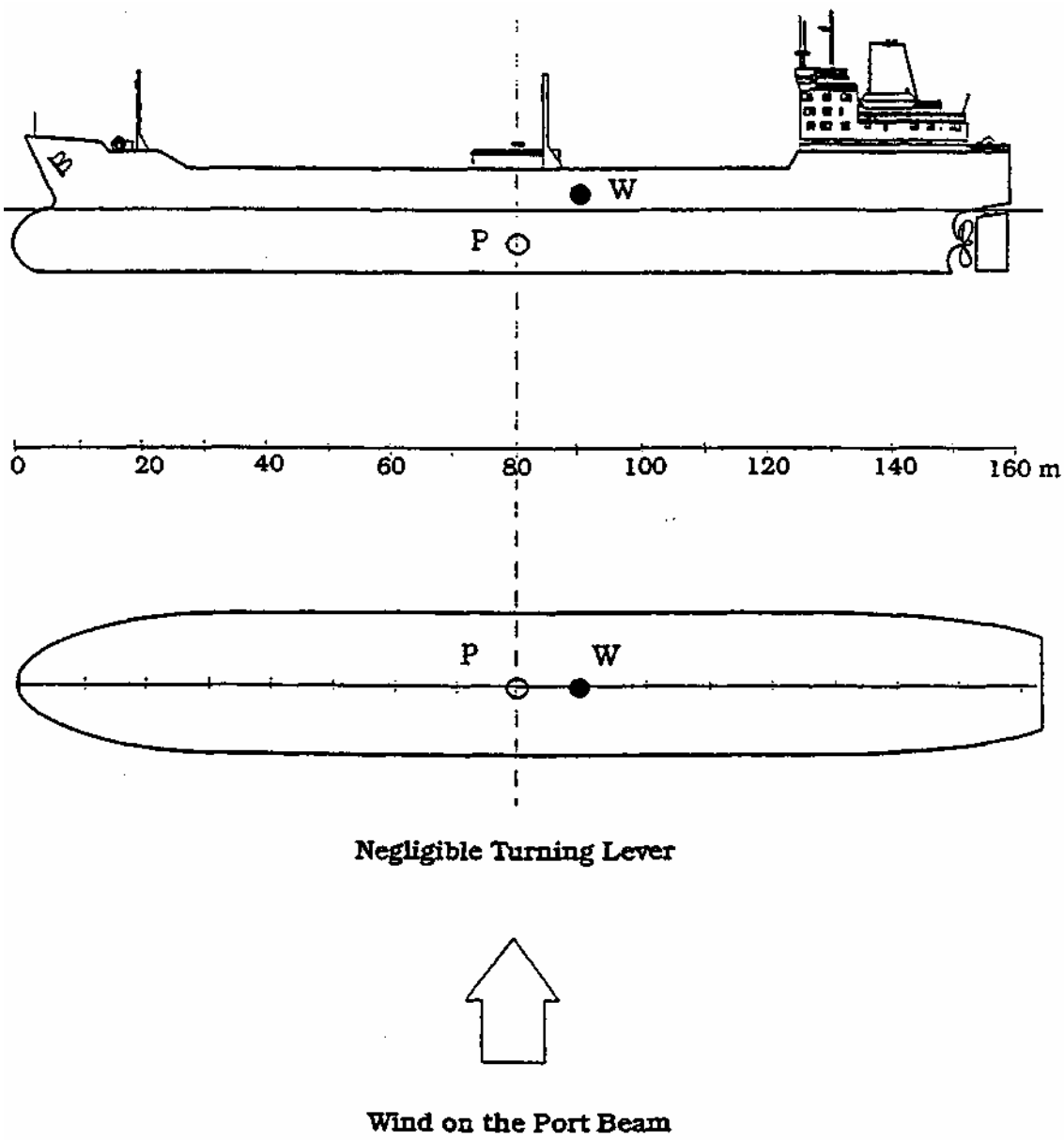

160m Product Tanker — Loaded and on Even Keel

Figure 4 - 1 Vessel stopped

Vessel Making Headway

When the same ship is making headway, the shift of the pivot point upsets the previous balance attained whilst stopped, figure 4-2. With the wind on the beam, the centre of effort of the wind remains where it is but the pivot point moves forward. This creates a substantial turning lever between P and W and, depending on wind strength, the ship will develop a swing of the bow into the wind.

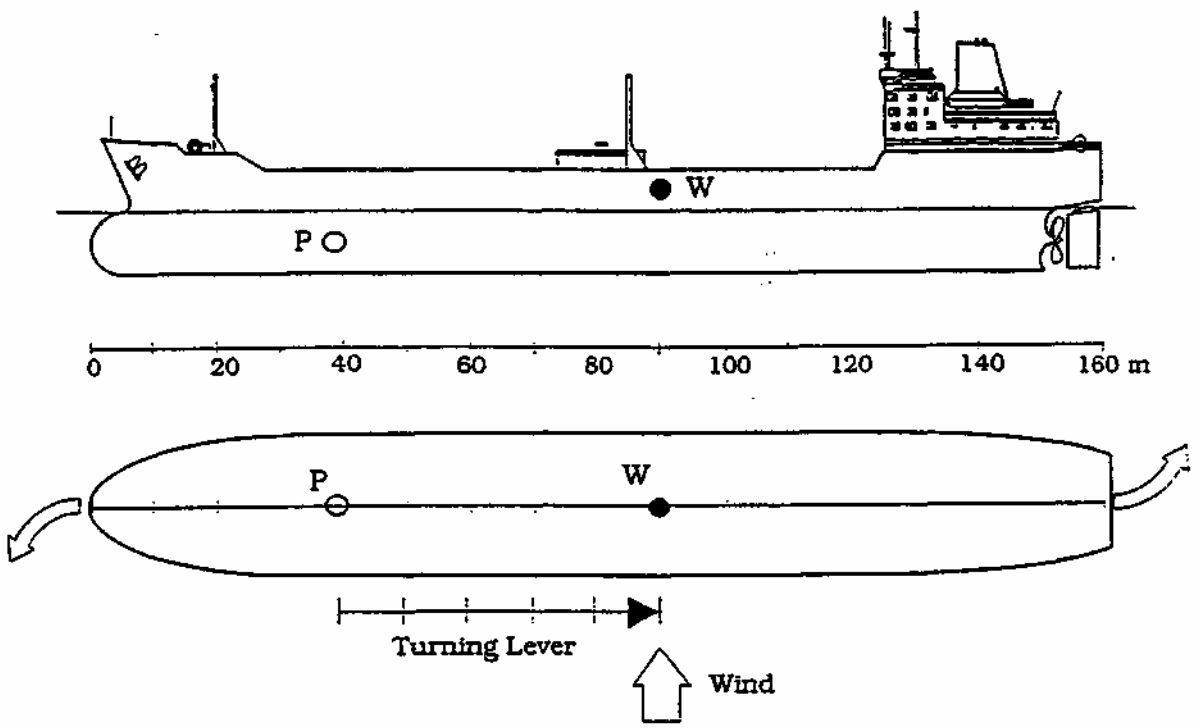

Figure 4-2 Vessel making headway

This trend is compounded by the fact that at lower speeds the pivot point shifts even further forward, thereby improving the wind's turning lever and effect. It is a regrettable fact of life that when approaching a berth with the wind upon or abaft the beam that as speed is reduced the effect of the wind gets progressively greater and requires considerable corrective action.

When approaching a berth or a buoy with the wind dead ahead and the ship on an even keel such an approach should be easily controlled. Even at very low speeds the ship is stable and will wish to stay with the wind ahead until stopped.

Vessel Making Sternway

The effect of the wind on a ship making sternway is generally more complex and less predictable. In part this is due to the additional complication of transverse thrust when associated with single screw ships. Remaining with the same ship, figure 4-3, we have already seen that with sternway the pivot point moves aft to a position approximately 1/4 L from the stern. Assuming that the centre of effort (W) remains in the same position, with the wind still on the beam, the shift of pivot point (P) has now created a totally different turning lever (WP). This will now encourage the bow to fall off the wind when the ship is backing, or put another way, the stern seeks the wind.

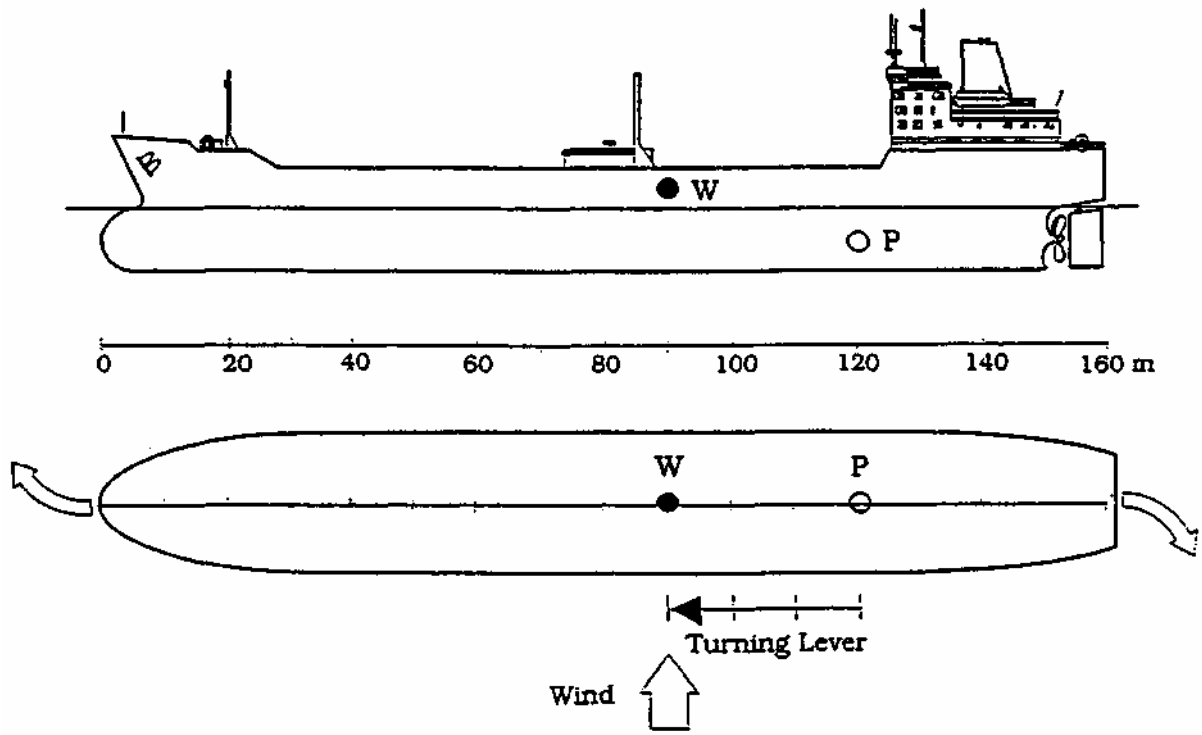

Figure 4-3 Vessel Making Sternway

Some caution is necessary, however, as the turning lever can be quite small and the effect disappointing, particularly on even keel. In such cases the stern may only partially seek the wind, with the ship making sternway 'flopped' across the wind. This situation is not helped by the centre of effort (W) moving aft as the wind comes round onto the quarter. This in turn tends to reduce the magnitude of the turning lever WP.

The other complicating factor is transverse thrust. If the wind is on the port beam, there is every likelihood that transverse thrust and effect of wind will combine and indeed take the stern smartly into the wind. If, however, the wind is on the starboard beam, it can be seen that transverse thrust and effect of wind oppose each other. Which force wins the day is therefore very much dependent upon wind strength versus stern power, unless you know the ship exceptionally well, there may be no guarantee as to which way the stern will swing when backing.

Trim and Headway

So far we have only considered a ship on even keel. A large trim by the stern may change the ship's wind handling characteristics quite substantially. Figure 4-4 shows the same ship, but this time in ballast and trimmed by the stern. The increase in freeboard forward has moved W forward and very close to P. With the turning lever thus reduced the ship is not so inclined to run up into the wind with headway, preferring instead to fall off, or lay across the wind. Because the ship is difficult to keep head to wind, some pilotage districts will not accept a ship that has an excessive trim by the stern, particularly with regards SBM operations.

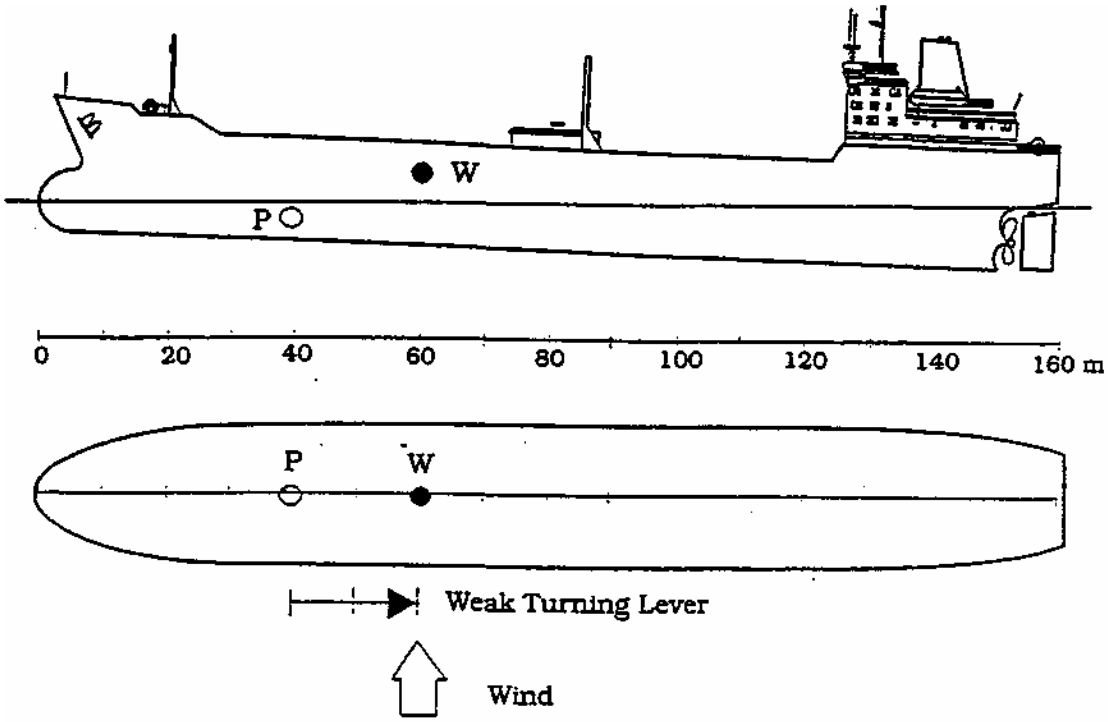

Figure 4-4 Stern trim and headway

Trim and Sternway

The performance when going astern is also seriously altered. With the wind on the beam and W well forward, the turning lever WP is consequently increased (figure 4-5). Once the ship is stopped and particularly when going astern, the bow will immediately want to fall off the wind, often with great rapidity while the stern quickly seeks the wind.

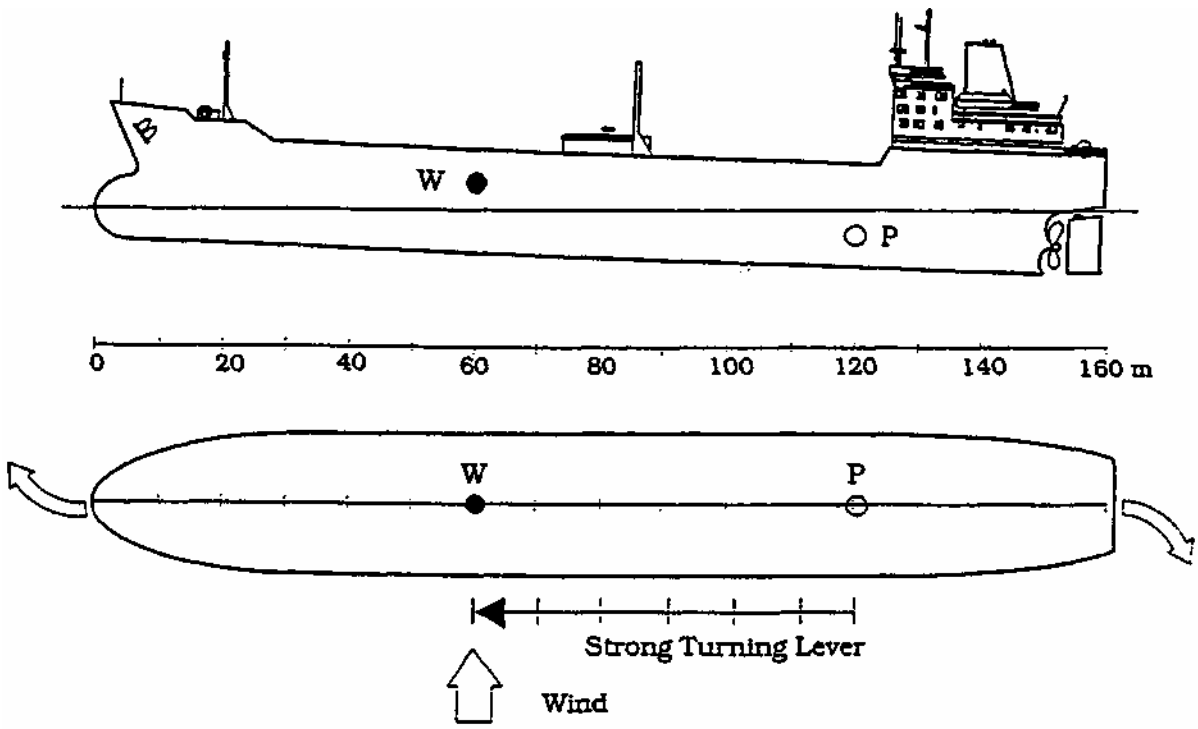

Figure 4-5 Stern trim and stern way

When berthing with strong cross winds, or attempting to stop and hold in a narrow channel, it is best to plan well ahead as such a ship can prove very difficult to hold in position. However, as long as we have some prior knowledge as to how the ship will react to the influence of the wind it can be turned to advantage and readily employed to aid rather than hinder ship handling. Not for nothing is it often referred to as a "poor mans tug!"

Vessel Head to Wind with Headway

The middle diagram in Figure 4 - 6 shows a vessel making Headway through the water, and Heading directly into the Wind. W is now well forward of amidships, and in fact very close to P; the wind is exerting no turning moment, or sideways force, on the vessel. A comparatively small change in relative wind direction (either by alteration of course, or wind fluctuation), will place the wind on the vessel's bow; the whole of one side of the vessel will now be exposed to the wind, and W will move aft as shown in the side diagrams of Figure 4 - 6. The following effects will now be experienced:-

a) The Turning Force will now develop a turning moment about P, tending to turn the vessel into the wind again.

b) The Wind Force will also develop a sideways force on the vessel, away from the exposed side.

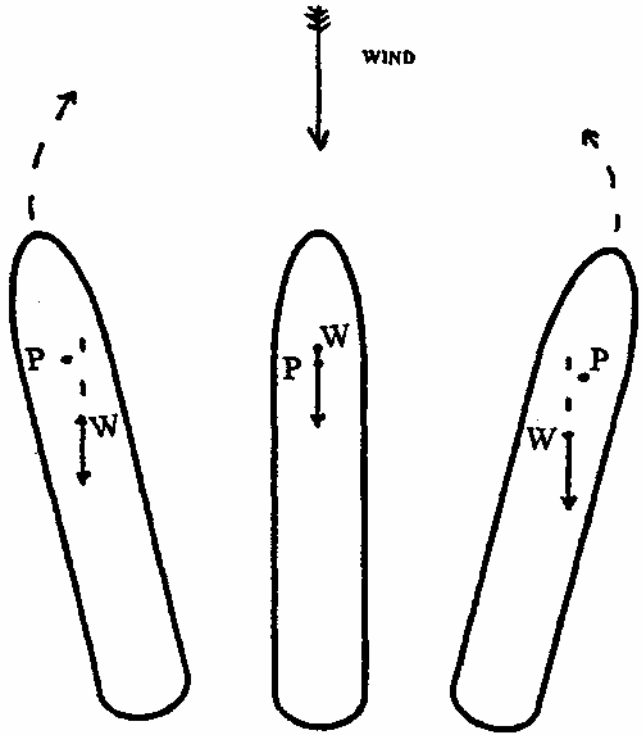

Figure 4-6 Headway with Wind Ahead - On Even Keel.

Head to Wind therefore, the vessel is "course stable", provided that she maintains Headway through the water.

If the ship has a large Trim by the stern W will be further forward, with a reduction, or even loss, of "course stability". This can sometimes result in a rapid and violent loss of control.

Vessel Head to Wind with Sternway.

Consider the situation when our vessel remains Head to Wind, but now starts to make Sternway through the water. W remains forward, whilst P has moved aft, as shown in the middle diagram of figure 4 - 7: the wind is exerting no turning moment, or sideways force.

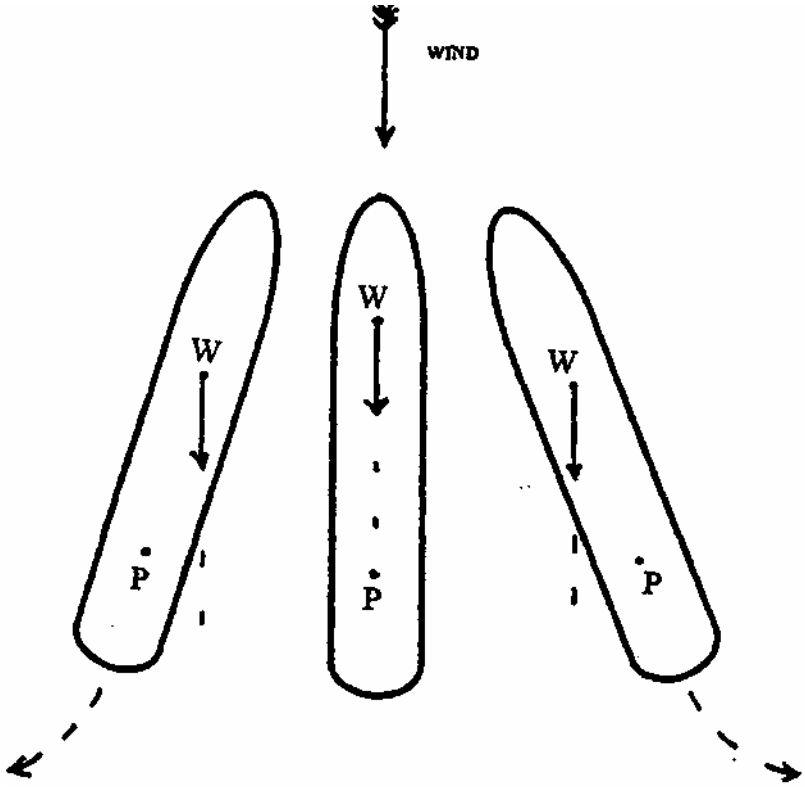

Figure 4-7 Sternway with Wind Ahead - On Even Keel

A comparatively small change in the relative direction of the wind will move W aft, as shown in the side diagrams of Figure 4-7: however P remains aft of W. The following effects will now be experienced:-

a) The Wind Force will develop a strong turning moment about P, tending to turn the vessel's bow further away from the wind.

b) The Wind Force will develop a sideways force on the vessel, away from the exposed side.

Head to Wind, as soon as the vessel starts to make Sternway through the water, she loses "course stability" and the bow will pay off away from the wind, sometimes quite rapidly.

If the ship has a large Trim by the stern W may move further forward, perhaps quickly, and the loss of "courses stability" is even more pronounced. This can sometimes result in a rapid and violent loss of control.

Vessel Stern to Wind with Headway

The middle diagram of figure 4-8 shows a vessel making Headway through the water, and with the Wind directly Astern. P is forward, a long distance from W, which is well aft. A comparatively small change in relative wind direction will move W forwards as shown in the side diagrams of Figure 4-8: however W is still some distance abaft P. The following effects will now be experienced:-

a) The Wind Force will develop a strong turning moment about P, tending to turn the vessel's Stern further away from the Wind.

b) The Wind Force will develop a sideways force on the vessel, away from the exposed side.

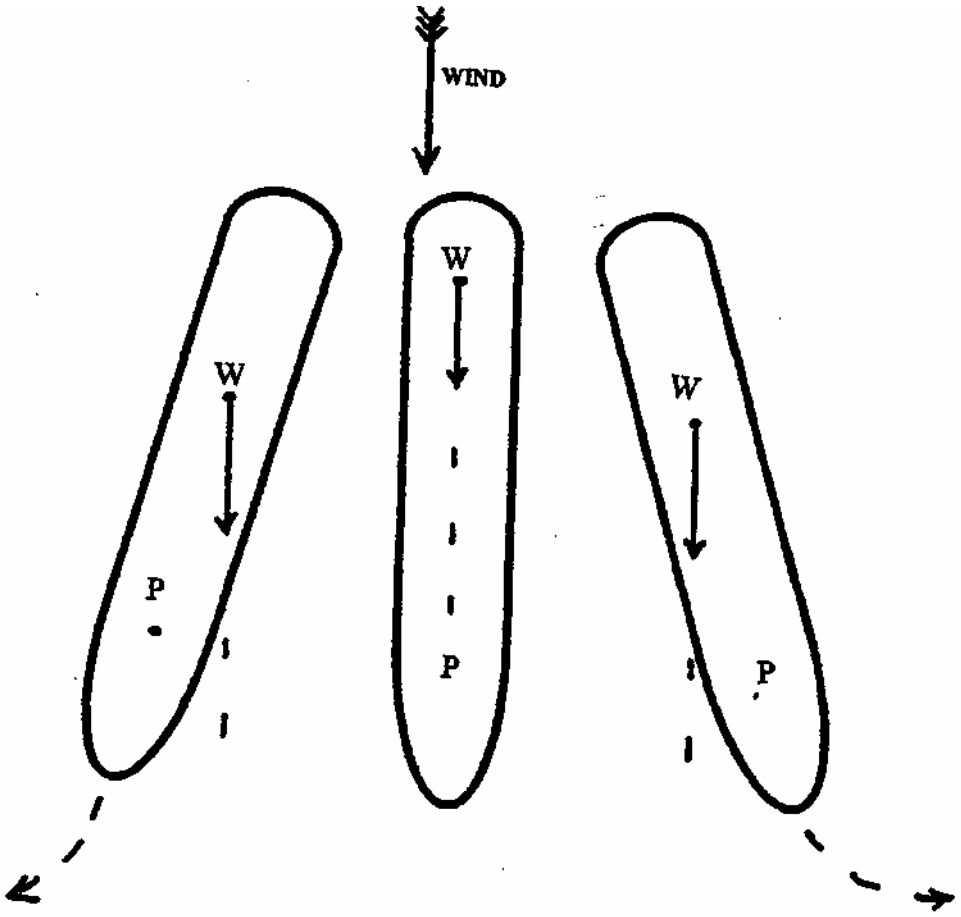

Figure 4-8 Headway with Wind Astern - On Even Keel

Making Headway with Stern to Wind, the vessel loses "course stability" and is difficult to steer, this effect is greater when there is also a following Sea or Swell.

If the ship has a large Trim by the Stern, W may move further forward, and loss of "course stability" may be generally less pronounced, but still a potential danger.

Vessel Stern to Wind making Sternway

The middle diagram of Figure 4-9 shows a vessel making Sternway through the water, and with the Wind directly Astern. P has moved aft, fairly close to W, which remains even further aft. A change in relative wind direction will eventually move W forward of P, as shown in the side diagrams of Figure 4-9, with the following effects:-

a) The Wind Force will develop a turning moment about P, tending to turn the vessel's Stern back into the Wind.

b) The Wind Force will develop a sideways force on the vessel, away from the exposed side.

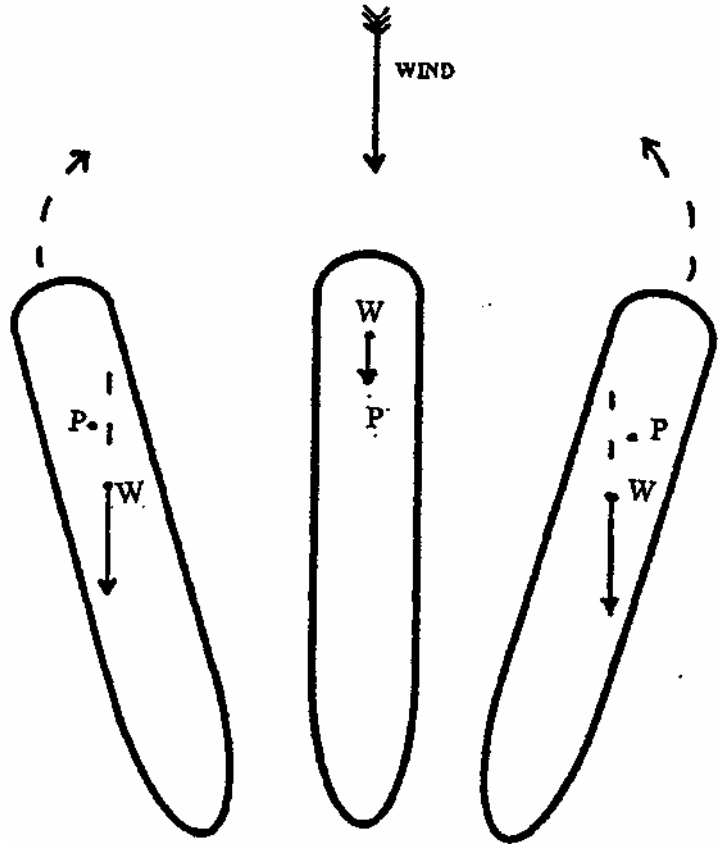

Figure 4-9 Sternway with Wind Astern - On Even Keel

Making Sternway through the water, with Stern to Wind, the vessel is again "course stable".

If the ship has a large Trim by the Stern W may move further forward, generally improving "course stability"; however with such a Trim there is always the possibility of unpredictable loss of control. **Calculations**

It is very useful to have a quantitative understanding of the actual force that a ship experiences whilst influenced by the wind. This may be of considerable benefit to pilots when endeavouring to estimate the wind limitations of a particular class of ship, establishing the size of tugs for a district and so forth. When confronted by the harbour authorities it is perhaps better, in the interests of professionalism, to be armed with concrete facts rather than simply say "we do not think it can be done". Worse is to be forced to attempt a movement with unacceptable risks.

Whilst complicated formulae do exist, for calculating the force of wind upon a ship, it would be more practical to have at hand a relatively simple method of achieving a working figure. The first requirement is to obtain the best available estimation of the area of the ship presented to the wind in square metres. This can be as simple as:

Length overall(m) x max. freeboard(m) = windage area(m^2)

An approximate wind force in tonnes per 1,000 m^2 can then be calculated using:

If V = Wind Speed (metres / second) = Wind Speed (knots) ÷2 then

Force (tonnes) per 1000m^2 = V^2 ÷ 18

It should be noted that the wind force varies as the square of the wind speed.
Small increases in wind speed can mean large increases in wind strength, especially in stronger winds, when gusting can place an enormous strain on the ship.
Using the above formulae this is illustrated with the graphs of wind force (tonnes) over a wide range of wind speeds (knots) for the tanker 'Jane Maersk' and the large car carrier 'Madame Butterfly' in figure 4-10.

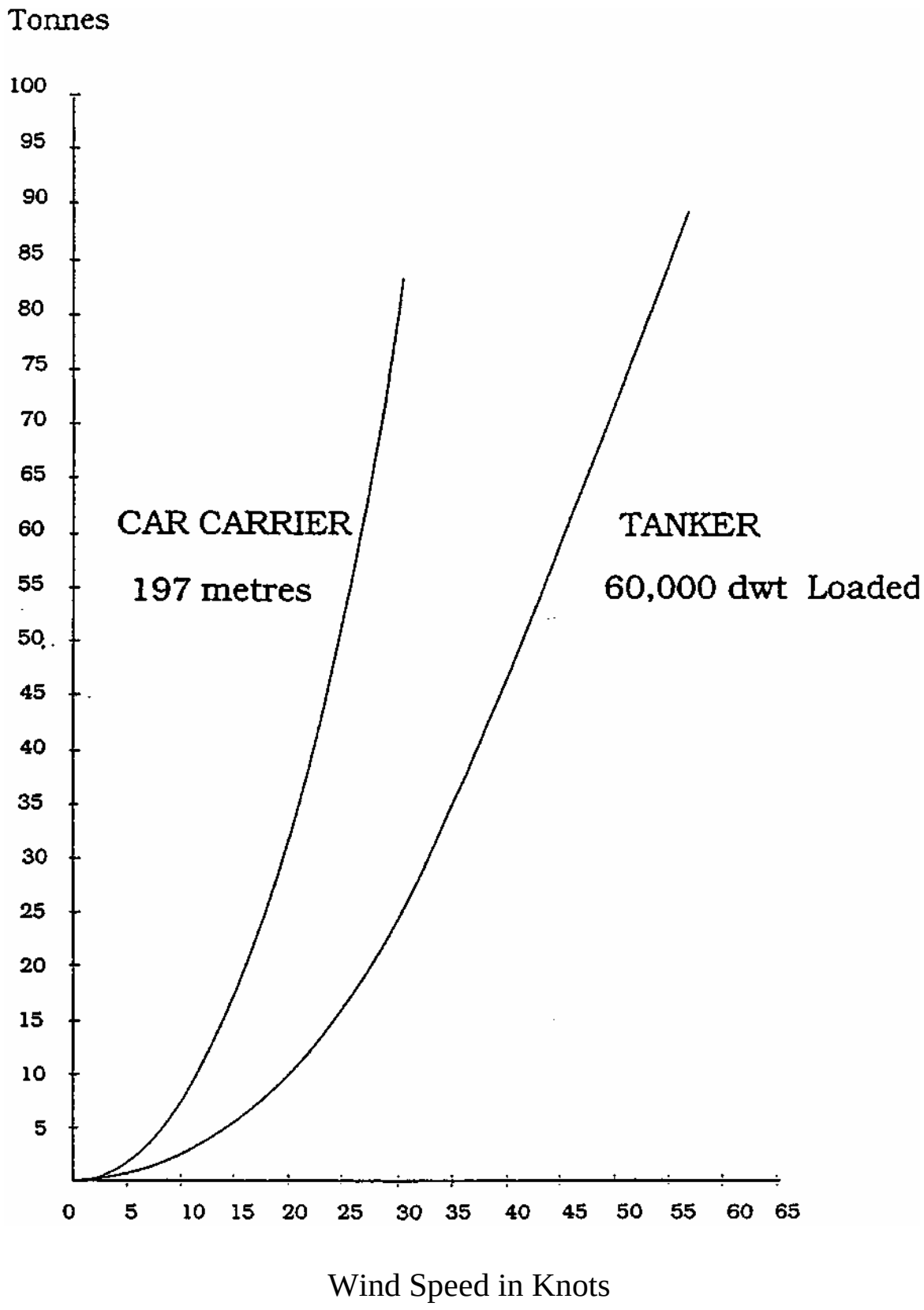

Figure 4-10 The effect of wind quantified

Ships in the category of the Jane Maersk at 60,000 dwt may have a main engine capacity of around 15,000 shp at sea speed. This is equivalent to about 150 tonnes. It is broken down to give a rough approximation for dead slow to manoeuvring full in figure 4-11.

Kicks ahead with full rudder will at best be somewhere in the region of 45% of these figures.

Similarly, if we assume stern power to be a little over half that of ahead power, we can compile an approximate list of the range of stern powers.

Transverse thrust will be no more than 10% of these figures.

Tanker 60,000 dwt

Main Engine 15.000 shp

Full Ahead 150 tonnes bollard pull

Kicks Ahead approx. 45% of ahead power

An Estimation of Rudder Force

Full Ahead	69 tonnes
Half Ahead	50 tonnes
Slow Ahead	33 tonnes
Dead Slow Ahead	17 tonnes

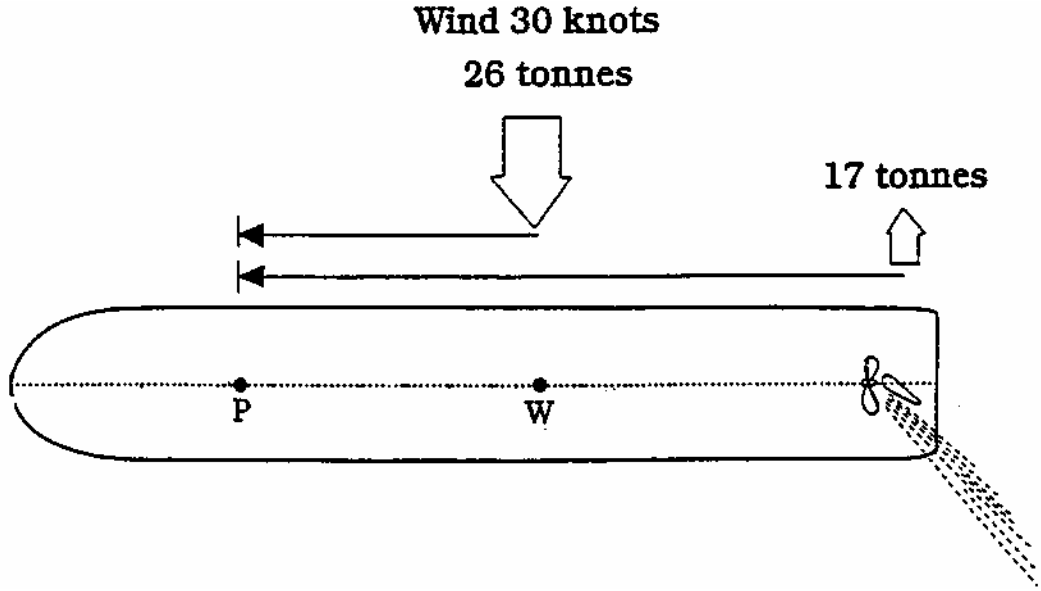

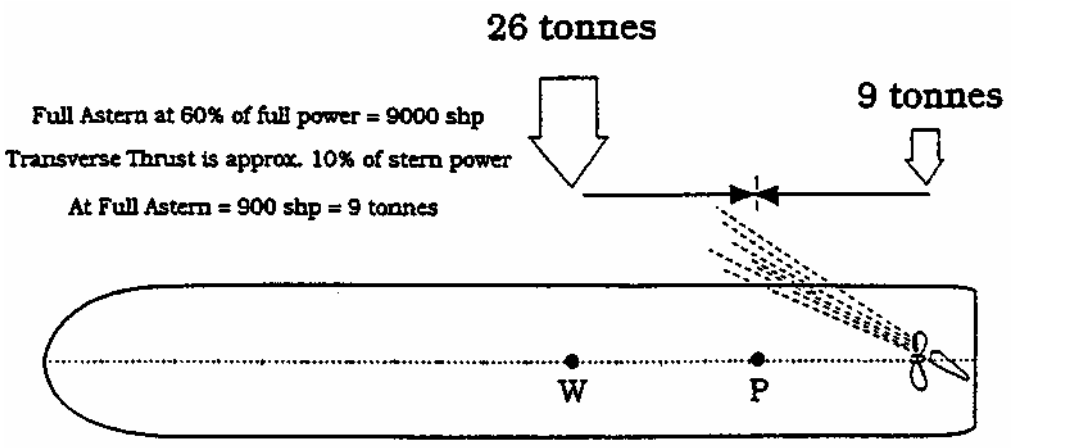

Example only. All figures approximate.

Figure 4-11 Tanker - forces at our disposal

A similar exercise is outlined in figure 4-12 for the Madame Butterfly class of ship which may be fitted with a bow thruster of 1,000 kW (1341 shp) or (13 tonnes).

Car Carrier 197m

Main Engine 10.000 shp

Full Ahead 100 tonnes bollard pull

Kicks Ahead approx. 45% of ahead power

An Estimation of Rudder Force

Full Ahead	45 tonnes
Half Ahead	34 tonnes
Slow Ahead	22 tonnes
Dead Slow Ahead	11 tonnes

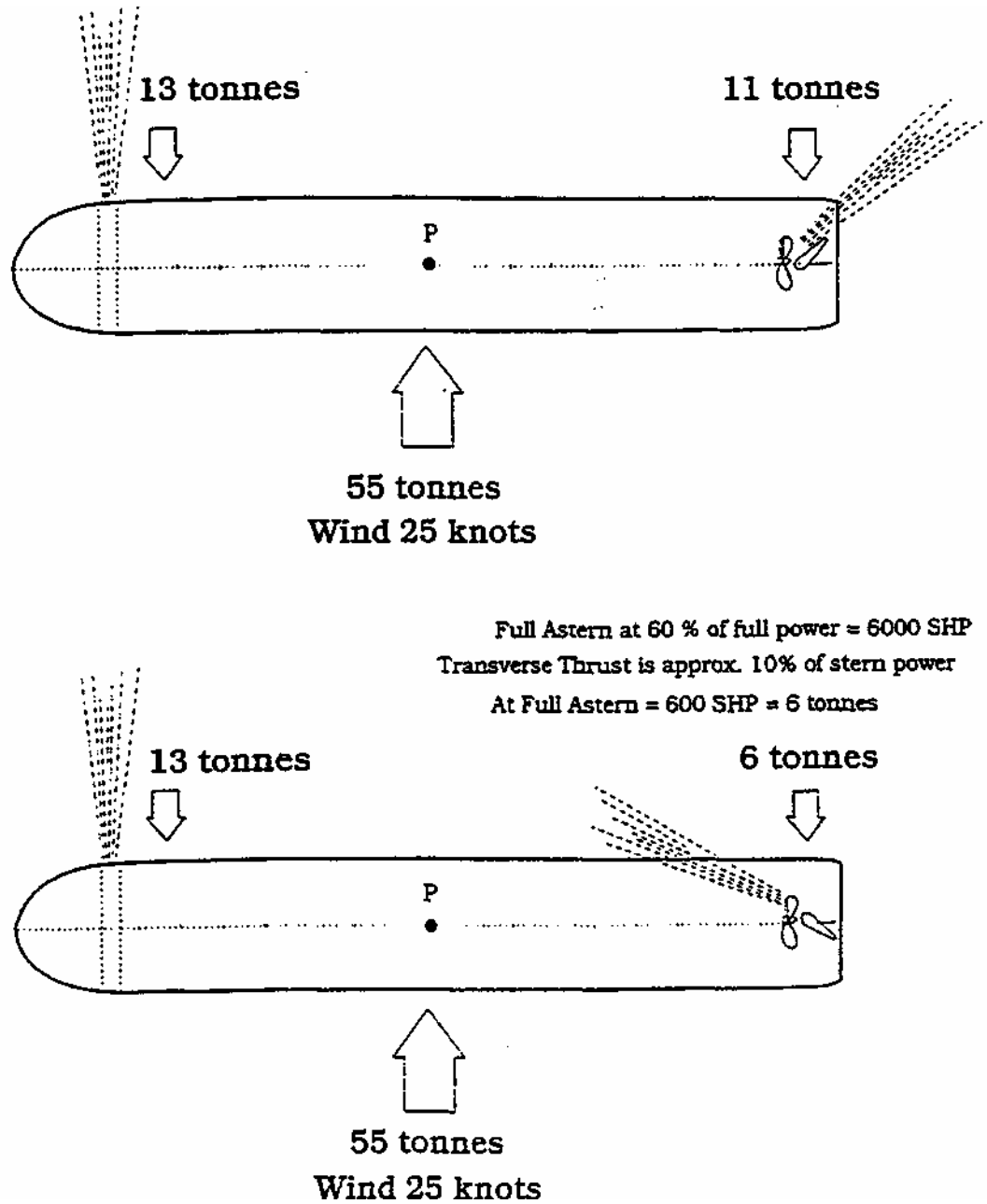

Figure 4-12 Car carrier - forces at our disposal

By comparing the wind force at its worse, ie on the beam, with the forces available to the ship handler, including tugs, several important points come to light.

a) **Kicks ahead with full power are very effective against a wide range of wind strengths.**

b) **Kicks ahead of dead slow and slow will be ineffective at certain wind strengths and more power must be used.**

c) **The weakness of transverse thrust as a force.**

d) **The likely wind strength at which the transverse thrust will be overcome by the wind.**

e) **The limits of the bow thruster in beam winds.**

f) **The size of tugs required for that class of ship, or its wind limits with the operational tugs in a specific port.**

This information is of course extremely basic, referring in the main to a ship which is stopped in the water, on even keel and with a beam wind. It is never-the-less surprisingly accurate, as trials have shown and more than adequate for practical purposes. The subject can however be taken much further and to great effect, particularly with regards to tug operations.

CHAPTER FIVE

ANCHOR WORK

Introduction

These notes are intended to give the reader a basic understanding of the ordinary standard stockless and high holding power anchors. The operational aspects of anchoring, including the problems associated with a large ship, are discussed and some equipment defects in large ships are described.

Designated Purpose of Anchors

On the basis of generally accepted criteria, a ship is expected to remain at anchor:

(a) In good holding grounds.

(b) In sheltered and semi-sheltered waters.

(c) In winds up to gale force 8.

The master is expected to put to sea if severe storms are forecast.

The existing equipment is not intended by the classification societies to be suitable as:

(a) A last means of defence in case of a machinery breakdown off a lee shore in a storm.

(b) A means of bringing a large moving ship to a stop.

Ordinary Standard Stockless (OSS) and High Holding Power (HHP) Anchors

The two anchor types in ordinary use today are the ordinary standard stockless, of which the most common types are Byers and Halls, and the high holding power anchor, of which the most popular is the Admiralty Cast anchor type 14 (AC 14).

Brief History of Both Anchors

The OSS anchor was introduced in 1840 (figure 5-3). Its greatest defect was its inherent roll instability, which was first noted by the Admiralty in 1885. If an anchor is roll unstable, one of the flukes will penetrate further into the seabed than the other. The shearing forces acting on the more deeply buried fluke will cause it to bite even deeper and rotate under the shank of the anchor. This process can continue until the fluke and the crown structure have rotated through 180 about the shank and the flukes are pointing upwards. In this position, the pull is less than 50 per cent than that obtained with both flukes penetrating the seabed.

The flukes should then re-trip and recommence burying into the seabed, but this is frequently prevented by the clogging of the articulation between shank and crown. This defect retarded its introduction into the Royal Navy for a number of years, but by 1900, stockless anchors were in common use in the Merchant Navy, although their holding power was far inferior to that of the older stocked anchor. Their ability to self-stow in a hausepipe proved so useful that they became accepted equipment for the RN.

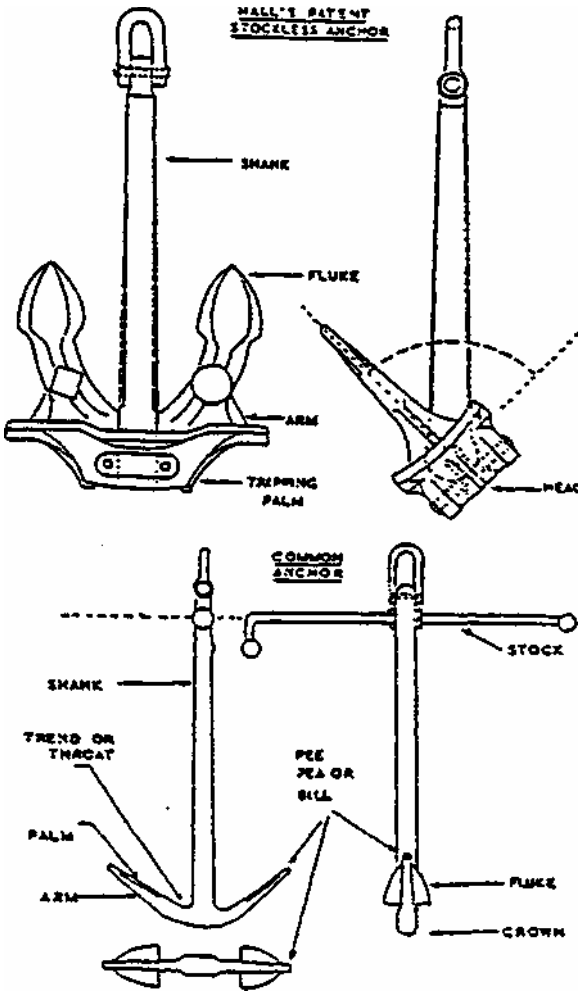

Figure 5-3 The Ordinary Stockless Anchor *(OSS)*

After much criticism from commanding officers of RN ships, test were introduced in 1943 and a design called the AC14 was effected (figure 5-4). This has now been accepted as the warship bower anchor and is normal equipment for some shipping companies. The main design improvements include a larger fluke area with stabilising fins.

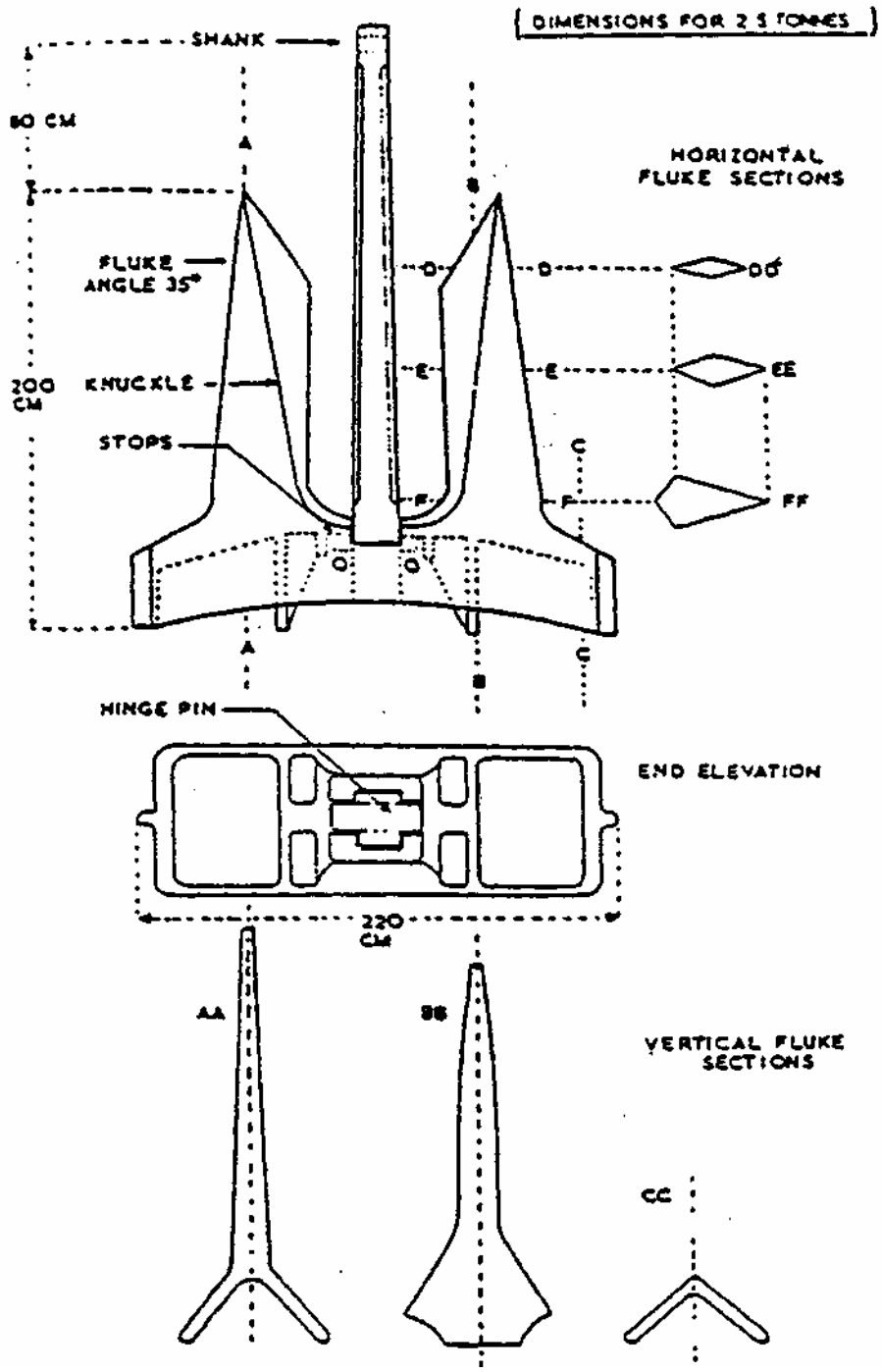

Figure 5-4 The AC 14 High Holding Power Anchor

Holding Power

Knowledge of the type of anchor on your ship is necessary because the holding power of each type is different. The holding power of an anchor is normally expressed in tonnes. The maximum holding power is reached when the anchor starts to drag but without reduction in its stability.

$$\textbf{Holding efficiency} = \frac{\textbf{Holding power}}{\textbf{Anchor deadweight}}$$

Figure 5-5 illustrates the holding efficiency and holding power of the OSS and HHP anchors in various types of holding ground. Note the HHP anchor has been granted a 25 per cent reduction in rule weight by Lloyds Classification Society. In all cases, the holding efficiency of the HHP in the seabed materials is between two and four times that achieved by the OSS anchor. If the ship is anchored on a seabed of rock, the holding power of the anchor is reduced to 1/3 of the weight of the anchor. It is interesting to note that Admiral Lord Nelson's anchor (HMS Victory) had a holding power of 2.8 times its weight, which compares very favourably with the OSS anchor.

Anchor type	Weight (tonnes)	Holding Efficiency			Holding power (tonnes)		
		Sand	Mud	Clay	Sand	Mud	Clay
Stockless (OSS)	29.9	4	2	3	120	60	90
AC14 (HHP)	22.4	14	8	6	310	180	130

Figure 5-5 Holding Power

Note:Lloyds allow mass of HHP anchors to be 75 per cent of comparable OSS anchors.

$$\textbf{Holding efficiency} = \frac{\textbf{Holding power}}{\textbf{Anchor deadweight}}$$

Maximum Holding Power is reached when the anchor starts to slip but without reduction in its stability.

Cable Considerations

The anchor is most efficient when subjected to a horizontal pull by the cable on the seabed. The aim should be to ensure that enough cable is veered to achieve this situation.

If insufficient cable is veered to exert a horizontal pull at the anchor, its holding power will be reduced in accordance with the following scale:

Angle of inclination of cable at anchor	Percentage of maximum holding pull of anchor
5°	80
10°	60
15°	40

When the ship drags her anchor, more cable is veered and the anchor holds. This action is correct, but the belief that it is the resistance of the extra cable on the seabed that lets the ship hold is a fallacy; the veering of the cable removed the shank/cable angle and the anchor holds once more.

Amount of Cable to Use

In addition, the amount of cable to veer depends upon a number of factors:

(a) Holding characteristics of the anchor.

(b) Length of stay.

(c) Strength of wind, tidal stream or current, and sea / swell.

(d) Swinging room.

(e) Type of cable.

(f) Depth/draught ratio.

There are a number of guidelines given for the amount of cable to veer. The Admiralty Manual of Seamanship quotes the amount of cable to veer in shackles is twice the square root of the depth of water in fathoms.

Depth	4 fathoms	Veer	4 shackles
	9 fathoms		6 shackles
	16 fathoms		8 shackles

In a questionnaire survey of Nautical Institute members, the scope used as a function of ship size is given below:

Ship size dwt	Scope Loaded	Ballast
20,000 - 50,000	7	9
50,000 - 90,000	7	9
> 90,000	6	8

"Scope" is generally considered to be the ratio of the cable veered: water depth.

Type of Cable

The type of cable on the ship is also an important consideration. The three types are:

Mild steel	grade 1
Special quality	grade 2
Extra special quality	grade 3

Grade 3 is the lightest; therefore, additional cable may have to be veered to ensure a horizontal pull.

The Depth - Draft Ratio

The depth:draught ratio is also an important consideration (figure 5-6). Bruce has shown that for a 200,000 dwt tanker in a sheltered anchorage free of waves, a 50 knot wind and 5 knot current conveniently acting head on, the total force on the ship, with a depth:draught ratio of 2.0, is 89 tonnes. This rises to 158 tonnes for a depth:draught ratio of 1.1.

Note that the OSS holding pull in these conditions is 132 tonnes.

In contrast, the AC14 shows a reserve of holding power at a 1.1 depth:draught ratio exceeding 50 per cent over the complete range of ships. Therefore, for those ships equipped with an OSS anchor, the thrust on the ship increases considerably with decreasing depth which, in some conditions, is greater than the holding power of the anchor.

Thrusts on tankers due to 50 knot wind and 5 knot current in sheltered anchorage free of waves.

Tanker dead-weight tonnes	Depth to draught ratio	All forces acting head-on			ASS anchor holding pull tonnes
		Wind tonnes	Current tonnes	Total tonnes	
	3.0	20.05	18.79	38.84	
	2.0	"	30.56	50.61	
50,802	1.4	"	47.54	67.59	60.9
	1.2	"	56.58	76.63	
	1.1	"	63.37	83.42	
	3.0	22.96	27.00	49.96	
	2.0	"	43.92	66.88	
101,605	1.4	"	68.32	91.28	90.3
	1.2	"	81.32	104.28	
	1.1	"	91.07	114.03	
	3.0	23.42	34.33	57.75	
	2.0	"	55.85	79.27	
152,407	1.4	"	86.87	110.29	112.7
	1.2	"	103.44	126.86	
	1.1	"	115.86	139.28	
	3.0	23.87	39.90	63.77	
	2.0	"	64.90	88.77	
203,209	1.4	"	100.95	124.82	131.6
	1.2	"	120.18	144.05	
	1.1	"	134.60	158.47	
	3.0	24.33	45.56	69.89	
	2.0	"	74.10	98.43	
254,012	1.4	"	115.26	139.59	150.5
	1.2	"	137.22	161.55	
	1.1	"	153.67	178.00	
	3.0	24.78	53.56	78.34	
	2.0	"	87.11	111.89	
304,814	1.4	"	135.51	160.29	171.5
	1.2	"	161.33	186.11	
	1.1	"	180.69	205.47	

Figure 5-6 Thrusts on tankers

Operational Aspects

When anchoring in an area where other ships are anchored, the approach course opposed to the resultant of the wind and current can be visually appreciated. This is more difficult to achieve when anchoring in an area devoid of other shipping, especially at night. The larger the ship, the smaller the limiting speed before dropping anchor. In a VLCC, the speed over the ground must be less than 0.5 knot. It is difficult to achieve a situation with the ship stopped over the ground.

The published tidal stream information in UK waters only refers to the top 20 feet.

For a large ship drawing 50 feet, the tidal stream information is not valid[6]. A difference in tidal rate of $2^1/_4$ knots has been reported at Immingham at a tidal range difference of only 15 feet.

A rule of thumb method often used is to reverse the engines until the propeller wash reaches the bridge or manifold (chosen by experience) and then let go the anchor. However, even if the experience of the master is such that he knows the ship is stopped through the water on these occasions, the ship is not necessarily stopped over the ground. Is a doppler log the answer? The wash from an astern movement can give errors of 1/2 knot. The log can also have been poorly calibrated. The Nautical Institute survey showed that only 35 per cent of VLCCs are fitted with bottom lock doppler speed logs.

Prior to anchoring, the set and drift of the current and wind should be established as well as possible and the ship placed on a heading opposed to the resultant of these forces. The anchor position should be marked on the chart and the forecastle officer briefed on the bridge.

In large ships, in order to establish that the ship is on the correct heading and the ship is stopped over the ground, the anchor should be lowered to the seabed, brake applied and taken out of gear. The cable should then be paid out slowly until the forecastle officer can use the lay of the cable to ascertain the correct ship's heading. Provided that the length of the cable does not exceed twice the depth of water, the anchor will trip or drag, thus obviating undue stress on the tackle[7]. Some pilots and masters prefer to carry out this operation with the anchor still in gear. When the forecastle officer is satisfied that the ship's heading and headway are correct, then the rest of the cable should be paid out and finally brought up. Excessive sternway, once the anchor has dug into the seabed material, can cause some part of the tackle to fail or carry away. The inertia of large ships is considerable. A VLCC making one knot over the ground has the same kinetic energy as Concorde at 1000 knots.

When the ship is brought up, the position of the bridge should be marked on the chart and swinging circle annotated with clearing bearings.

Further information about anchoring in a gale and the subsequent stresses from yawing and pitching, can be found in the Admiralty Manual of Seamanship, vol 3, pages 368 - 371.

Anchoring Equipment Defects on Large Ships

In this context, large ships are those > 150,000 dwt. A paper from Lloyds Register collated a summary of anchor, cable and windlass defects on ships longer than 240 m (figure 5-7).

Number of ships at risk	Ship years	Anchor defects	Anchor losses	Cable defects	Windlass component defects	Windlass prime mover defects
474	2397	53	119	40	120	35

Figure 5-7 Summary of Anchor, Cable and Windlass defects on large ships

All ships included in above are:

(a) 240 m or more in length

(b) Built 1965 - 1977 inc

(c) In service 1969 - mid 1978 inc

The "anchor defects" column excludes the 119 "anchor losses", but includes those anchors condemned at survey. The 40 "cable defects" include times when the cable has been cut for any reason, but excludes a loss due to brake failure. Both "anchor losses" and "component defects" include the windlass brake failing to hold. Calculation shows that each large ship has a major defect problem with anchoring equipment every $6^1/_2$ years.

Figures 5-8 and 5-9 describe the anchor losses in more detail, in figure 5-9, if "mooring" is considered the same as "dropping anchor", then 66 per cent of all brake failures occurred during this operation. If "unexplained losses" are then added, the incidence of brake failure rises to 80 per cent.

Windlass brakes failing to hold	71
Broken cables	10
Failed anchor shackles or anchor pins	10
Fractured shanks	5
Abandoned due to loss of motive power	5
No cause stated	5
Abandoned for operational reasons	3
Head and crown pin lost	3
Abandoned after windlass clutch failure	2
Ship collisions	2
Washed overboard whilst being overhauled	1
Spare anchor left ashore	1
Abandoned after windlass broke away from its seating	1
TOTAL	**119**

Figure 5-8 Causes of anchor losses

Losses reported as occurring while anchor being dropped	28
Losses attributed to "mooring"	19
Losses unexplained in Report	10
Heavy weather after ship had been at anchor	7
Attributed to grounding	3
Incorrectly secured whilst ship underway	4
TOTAL	**71**

Figure 5-9 Circumstances of apparent and definite windlass brake failures resulting in anchors being lost

Note: If "mooring" is considered the same as "dropping anchor", then 66 per cent of all brake failures occurred during this operation.

If "unexplained losses" are added, then incidence of brake failure rises to 80 per cent.

The general incidence of defects over the LR fleet as a whole has not varied much over the years. Anchoring equipment still achieves a good compromise between

cost and reliability. Only in ships of > 240 m is this adequacy open to question.

It is worthwhile comparing the above figures with the results of the Nautical Institute questionnaire which asked mariners of ALL ships which were the envisaged areas needing improvement. It is interesting to note that an improved brake control is seen by the majority to warrant action.

DREDGING ANCHORS

General

In the coastal trades of Europe small ships frequently resort to dredging anchors when berthing as an aid in confined areas, often in difficult tidal and wind conditions. On larger tonnage, with the exception of a limited number of pilotage districts, or in cases of emergencies, it is an art which over the last two or three decades has declined in usage. This may be for fear of damaging the anchor equipment on ships which are common today. Such reservations are unnecessary if the equipment is used correctly and within the operational limitations of the anchor, cable and windlass. Few opportunities exist on board ship to practice specific areas of ship handling and this is also a difficult aspect of ship handling to simulate in electronic simulators. It is on the other hand, an area in which manned models excel, offering every opportunity for experimentation and practice.

Local Knowledge

It goes without saying, that the type of sea bed is of paramount importance to dredging, soft mud being the most obvious choice. The bottom must also be free of obstructions such as power lines, pipes and rock, therefore good local knowledge is essential. As the anchors normally dredge just inside the lines of the ship, there must also be adequate under keel clearance to avoid damaging the hull. This is also very much a question of local knowledge and suitability varies considerably from one district to another. It is never the less interesting to note, that in one district, ships of up to 120,000 dwt frequently dredge 2 anchors, some times on flat rock, to assist control when berthing without tugs. The risk of serious damage to ship or quay far outweighs damaging an anchor or windlass.

The Windlass

Research has shown that whilst the anchors and the cable are relatively reliable, the windlass is not. This is partly due to the disproportionate size of a windlass on the much larger ship of today. A 1000% increase in tonnage has only been matched with a 250% increase in the size of anchor gear. There has been some evidence to suggest that this weakness is likely to exist in ships over 50,000 dwt. In addition it should be remembered that the Kinetic Energy created by a ship of > 50,000 dwt moving over the ground in any direction, at more than say 0.3 knot, is enormous. By comparison, windlasses may only be capable of lifting a minimum design weight, which is specified by the Classification Societies. This is the weight of the anchor and four shackles of cable, hanging dead in the water and therefore nothing in comparison to the full weight of the ship. If all of this energy is imparted into the anchor it has to go somewhere and it is usually to the windlass. The dissipation of such energy results in as brake or gear failure!

Safety Parameters

A list is included at the end of this chapter for those who wish further reading on the history and use of anchors. It is from this source material, which is based upon extensive research by the Classification Societies, that we can establish some safety parameters within which to operate when dredging anchors.

a) The amount of cable in the water should not exceed $1^1/_2$ x depth of water. (Some sources quote 2 x depth). If this figure is exceeded the anchor is likely to dig in and commence holding.

b) The design speed of a windlass gypsy in gear is about 30 feet/minute which is approximately 3 minutes a shackle. This is equal to a ship speed of 0.3 knots over the ground.

c) The windlass is only designed to lift the dead weight of the anchor and four shackles.

If therefore, the amount of cable in the water does not exceed 1 1/2 x depth, we have a safety factor which guards against speeds in excess of 0.3 knot, because the anchors will not dig in and hold, but drag. (Some companies use 0.5 knot).

When the amount of cable exceeds 1 1/2 x depth, the speed must be below 0.3 knot, especially if the windlass is in gear or the brake is screwed up. The anchor will most certainly dig in and attempt to hold the full weight of the ship.

Letting Go

On smaller ships, when pilots are putting out anchors for dredging purposes, it is customary to 'let the anchor go' on the brake. On large ships, however, with unknown equipment and crews of mixed nationality and capability, it may be appropriate to walk out the anchors in gear rather than let them go on the brake. This affords the pilot much more control over the operation, guarding against the crew 'screwing up' the brake with the wrong amount of cable out, or worse still, letting the cable run away, leaving the pilot with 12 shackles out on both anchors!

Each tanker company has its own specific Standing Orders for anchoring large ships; their individual methods invariably work around these recommendations and should be adhered to at all times.

Dredging Two Anchors

Dredging is remarkably effective at eliminating the two major problems that occur when berthing without tugs, namely control of heading and speed. The effect of dredging can be seen in figure 5-1. The ship is conducting a dredge with two anchors, working into a port side berthing position. By dredging the two anchors the pivot point is brought right forward between the two windlasses. This gives the ship a much improved and excellent steering lever. The small weight of the two anchors is also surprisingly effective in controlling the speed of the ship. Even whilst maintaining dead slow revolutions, the ship may gradually slow down and stop. This in turn ensures that the pivot point remains forward and that lateral resistance, which would otherwise oppose turning ability, is also kept low throughout.

The net result is an ability to keep the speed down, but at the same time use main power more efficiently when controlling heading with kicks ahead. The bow can virtually be driven on the anchors, to the desired position and more to the point will remain there. At the same time, the old enemy, speed is kept well under control!

Some Masters may express some concern as to whether two anchors being dredged will foul each other while the ship is turning. The answer to this is no because, if the ratio of cable to depth of water is correct, one anchor simply cannot reach the cable of the other; they should also be easy to recover once alongside.

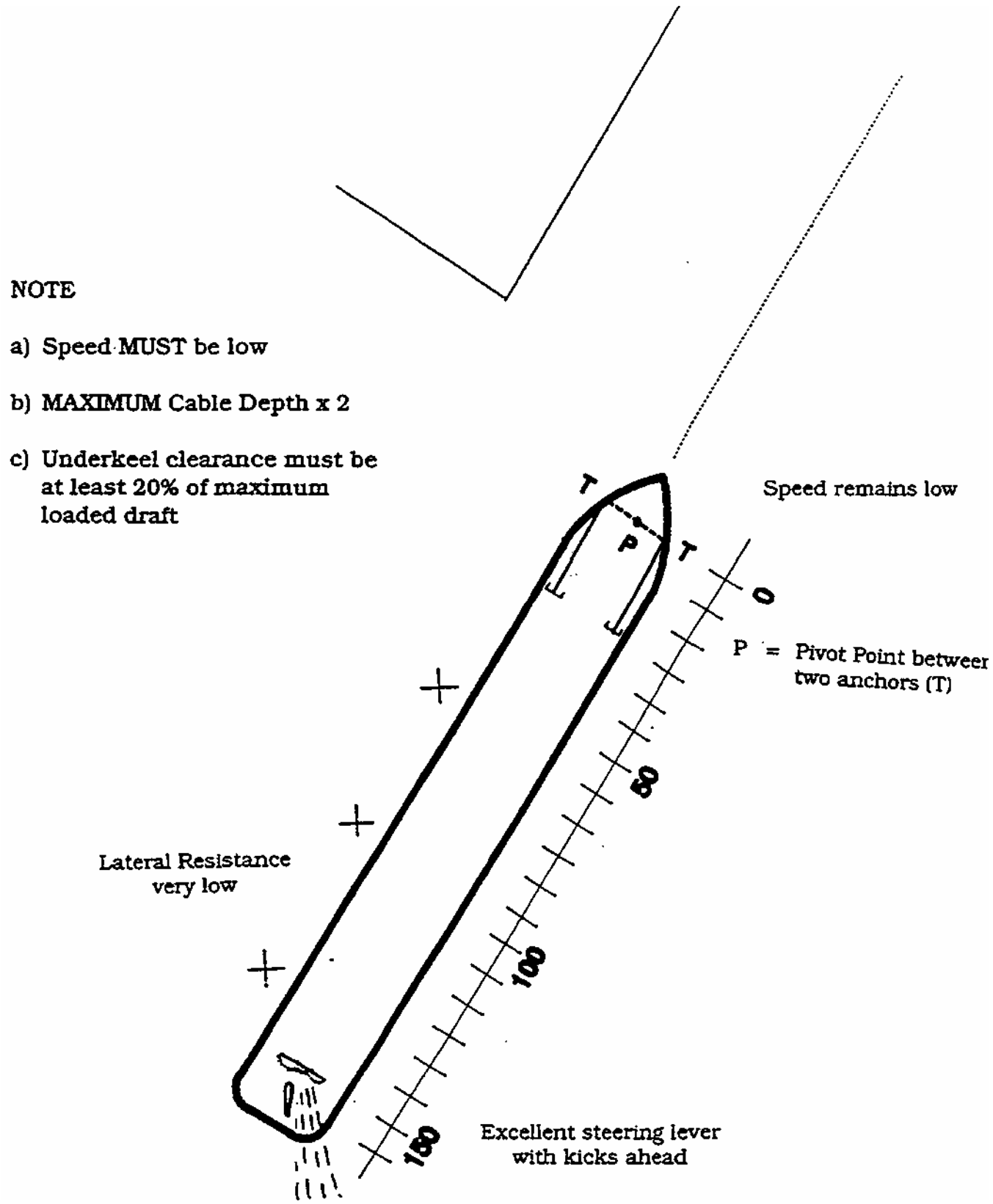

Figure 5-1 Dredging two anchors

Dredging One Anchor

Generally speaking because pilots and masters have more experience of dredging one anchor than two, the question is frequently asked, "Why dredge two anchors?". The answer is relatively simple: because dredging one anchor only achieves 50 % of the effect which could otherwise be gained by dredging two anchors. It is, therefore, not possible to use anything like the same amount of power for positioning the bow and the speed is nowhere near as easy to control.

By using one anchor, particularly on large beam ships, it should be remembered that the pivot point is moved out to the side, figure 5-2. This creates an effective turning moment, in much the same manner as a back spring. This can quite clearly be felt and needs constant counter helm to correct, this can be irritating if a straight line approach is desired. On the other hand, if a large turn in confined waters is necessary prior to berthing then this tendency can obviously be utilised and turned to great advantage.

The single anchor can be viewed effectively as a back spring. The validity of these points should be considered when deciding whether to deploy one/two anchors.

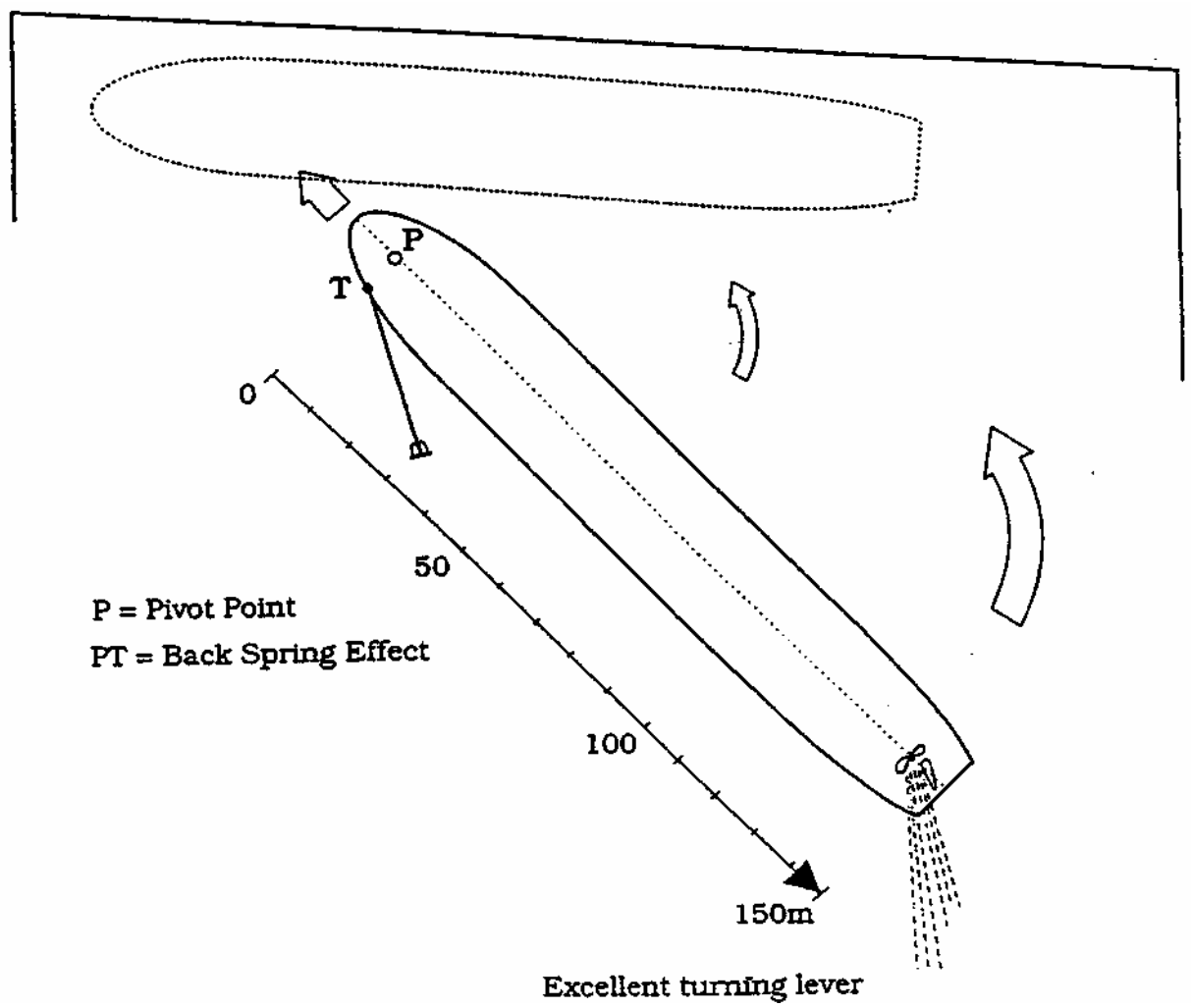

Figure 5-2 Dredging one anchor

Important Points

There is a very fine line between the success or failure of a dredging operation. The following points are crucial in order to achieve the desired results:-

a) **Maintain the normal slow speed of approach prior to letting go, or walking out, the anchors.** If the ship is stopped the anchors will dig in and it is then difficult to get underway again. The ship may also drift badly out of position.

b) **Walk the anchors out as early as possible.** This gives sufficient time to get the feel of the ship before the berth is reached.

c) **Do not let the ship stop too early.** This lets the anchor flukes drop and dig in and it then takes substantial power to get the ship underway again.

d) **Do not let the speed build up.** This pushes the pivot point back to its normal position. Consequently the anchors cease to be effective and are of no use.

e) **Do not exceed 1 1/2 x depth.** It is possible however, especially on small ships, to 'feel' the anchors and adjust the amount of cable accordingly.

f) **Keep the weight on the anchors.** Going astern the ship will take the weight off the cables and they become ineffective.

g) **Avoid rushing the operation,** particularly swinging, on large ships. There should only be a gentle and steady strain on the cable(s); the manoeuvre being slow but very effective.

h) **Once in position** on the berth, slack back the cables as the tension in them is sufficient to pull the ship off the berth.

BIBLIOGRAPHY

Buckle, A K, "Ten Year Review of Defects and Failures in Large Ships' Anchoring and Mooring Equipment". IME Conference on Mooring Large Ships over 150,000 dwt. December 1979.

Bruce, P, "Inadequacy of Anchors in Large Ships". Same conference as 1.

Danton, G L, "The Theory and Practice of Seamanship".

Van den Hoak, R, "Design of Anchors, Cables and Mooring Wires". Same conference as 1.

Admiralty Manual of Seamanship, vol 3, pages 288; 290.

Ono, A O, "Survey of Anchoring Systems", Seaways. September 1983.

Berry, F, "Operational Requirements for Anchors and Associated Equipment with Special Reference to Large Ships to consider a Standard Procedure in bringing Large Vessels to Anchor in Remote Off-Shore Anchorages".

CHAPTER SIX

INTERACTION

Interaction

The film 'Interaction' which to date has probably been seen by thousands of seafarers, is without doubt extremely good value. Despite its age the content is still good and very relevant. This is another area where manned models excel giving officers every opportunity to take their ship in close to a bank or ship at various speeds and experience the effects of interaction for real. The models are very strong, having survived some spectacular collisions and groundings over the years, as such this is the best way to gain invaluable experience, better than one day too late on a real ship!

Bank Effect

The problem in its most simplistic form is the boundary layer of water that surrounds a ship when it is making headway. Forward of the pivot point a positive pressure area builds up whilst aft of the pivot point the flow of water down the ship's side, creates a low pressure area, see figure 6-1. This area extends out from the ship and in deep open water clear of other traffic is not a problem.

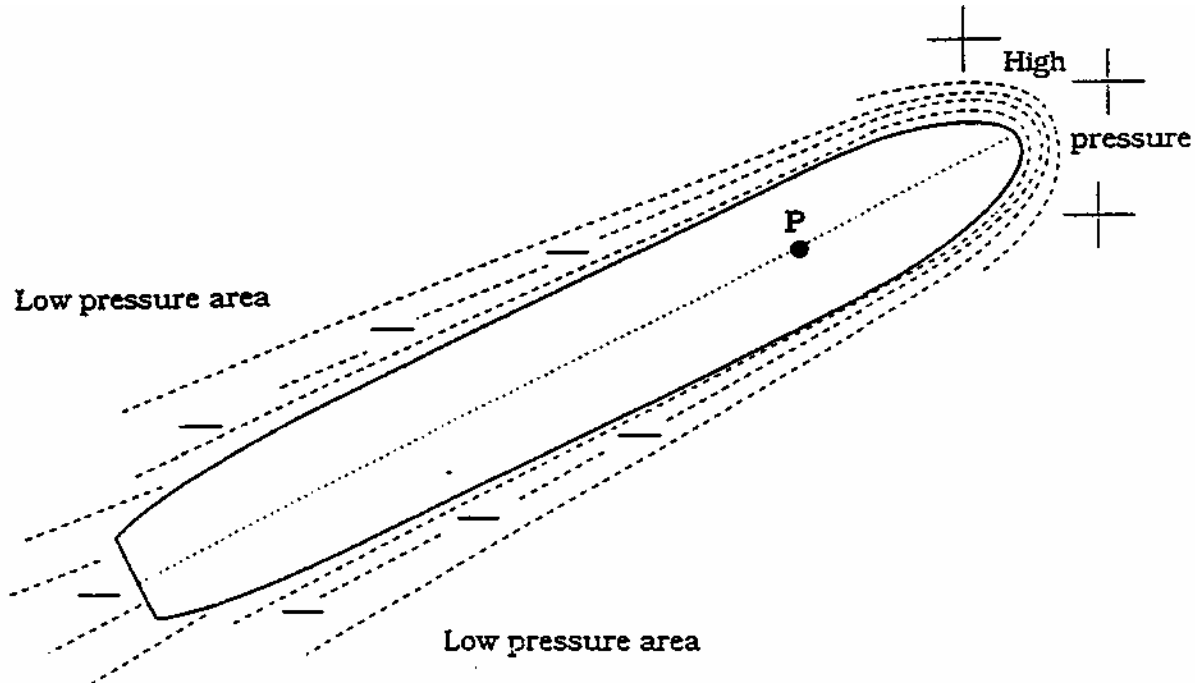

Figure 6-1 Pressure distribution with headway (simplified)

If, however, the ship commences to close a vertical obstruction, such as a shoal or canal bank, the area experiences some degree of restriction and the ship will be influenced by the resultant forces which build up. It is often thought that the positive pressure at the bow is the main problem, probably because of the tendency to relate most channel work to the bow and heading. Looking at figure 6-2 it can be seen that whilst pressure at the bow is important it is only working on a short turning lever forward of the pivot point. The low pressure or suction area is, on the other hand, working well aft of the pivot point and consequently is a very strong force.

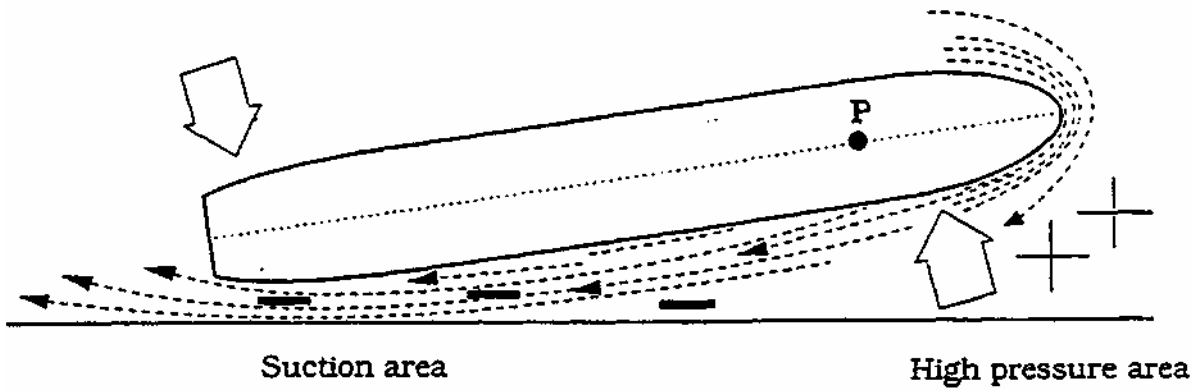

Figure 6-2 Bank effect

As a result of the two forces which have developed, the stern of the ship is likely to be sucked into the bank. It can be very difficult to break out of its hold, the ship requiring constant corrective rudder and power, sometimes hard over, in order to control heading. Excessive speed, yet again, is a crucial factor in creating a 'Bank Effect' problem, because the magnitude of the forces varies with the square of the ship's speed or water flow.

Squat

So far we have only considered a vertical obstruction in the vicinity of the ship. Should it also be running in shallow water, depth less than twice the draft, an additional obstruction exists which can seriously compound the problem. In figure 6-3 the ship is running on even keel with a small under keel clearance and, therefore, water which would normally pass under the ship is now severely restricted.

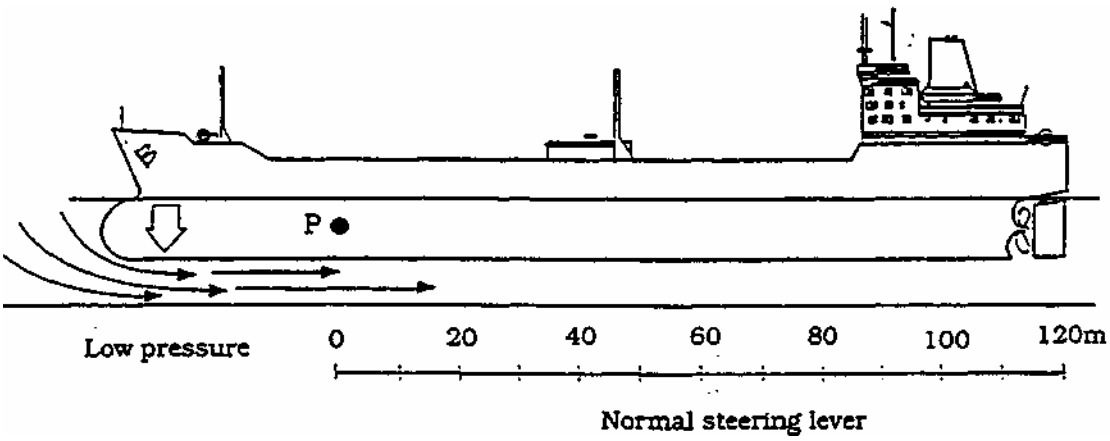

Figure 6-3 Shallow water

This results in two things, firstly the build of water ahead of the ship, longitudinal resistance pushes, the pivot point back from P to PP and the steering lever is reduced. Secondly the water being forced under the bow, at a higher speed than normal, creates a low pressure and loss of buoyancy. The ship will now 'Squat by the Bow' which in turn makes the problem even worse. Several cases have been reported of large ships running in shallow water and experiencing bow sinkage of up to 2 metres!

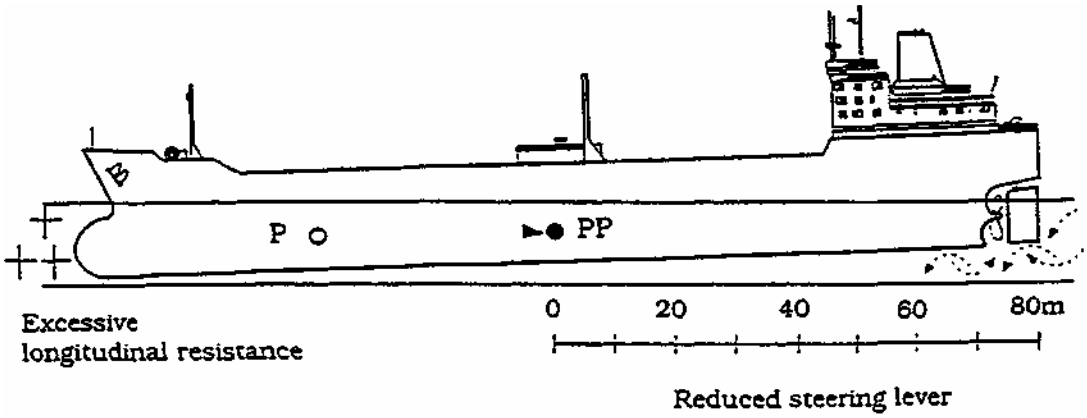

Figure 6-4 The effect of squat (water pressure)

In addition to the possibility of grounding forward there also exists the possibility of losing control and sheering violently out of a channel. If the helmsman allows a small swing to develop, longitudinal resistance ahead of the ship will be brought round onto the exposed bow, (as in figure 6-5) which in turn will encourage a violent swing in the same direction as the helm. Counter helm to correct the swing may be sluggish because as we have seen, the steering lever is reduced. Once the ship does respond, it may now sheer violently the other way. A chain reaction then sets in, with the ship sheering badly from one side to the other and failing to respond correctly to the helm. The effect can be extremely rapid, with the ship out of the channel and aground in just a few minutes. Excessive speed is the main contributing factor under such circumstance; reduced speeds are essential to avoid such violent forces building up.

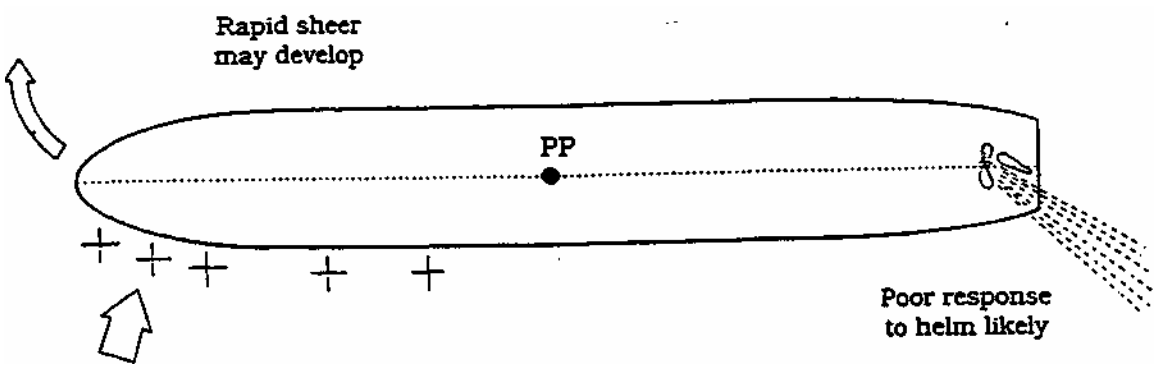

Figure 6-5 The effect of squat (helm response)

Trim is also important and in some districts the pilotage authority may refuse to handle certain ships if they are trimmed by the head and may even request a small trim by the stern. The latter does, in any case, improve the steering lever and therefore the handling of a ship, it may also be intended as an allowance for squat by the bow and very much a decision based upon local knowledge and experience.

Shallow Water

It would be wrong to imply that bank effect is only experienced within the domain of canals and rivers with steep sided banks, as illustrated in figure 6-6. To a ship running in shallow water, with adjacent but gently shelving mud or sand banks, such as low lying estuarial areas, figure 6-7, the effect can be far more insidious and violent.

There are many cases, in the archives of casualty investigation, where groundings and collisions have occurred in such areas, due to drastic loss of control, whilst the ship was under the combined influence of shallow water and bank effect.

One noticeable feature in some of these casualties, is the tendency of the Master to immediately reduce revolutions, or even stop the engine, when faced with the ship sheering the wrong way and apparently failing to respond to progressively larger angles of helm. Whilst this is of paramount importance, if it is evident that grounding or collision is imminent, in other circumstances it is suicide. Hard over rudder and a healthy 'kick ahead' are essential to regaining control.

These are of course generalities and every event is dictated by a set of unique circumstances.

It is clear that many ships work daily in shallow water without any problems what so ever, just occasionally however, all the ingredients, shallow water, bank effect, excessive speed, poor trim, come together and combine in an insidious manner to create another casualty.

Ship to Ship Interaction

It is clear thus far that a great deal of caution needs to be shown when operating in narrow and shallow waters. It almost goes without saying, that extreme care is needed if it is now intended to bring another ship into the same situation by getting involved in an overtaking or passing situation as well.

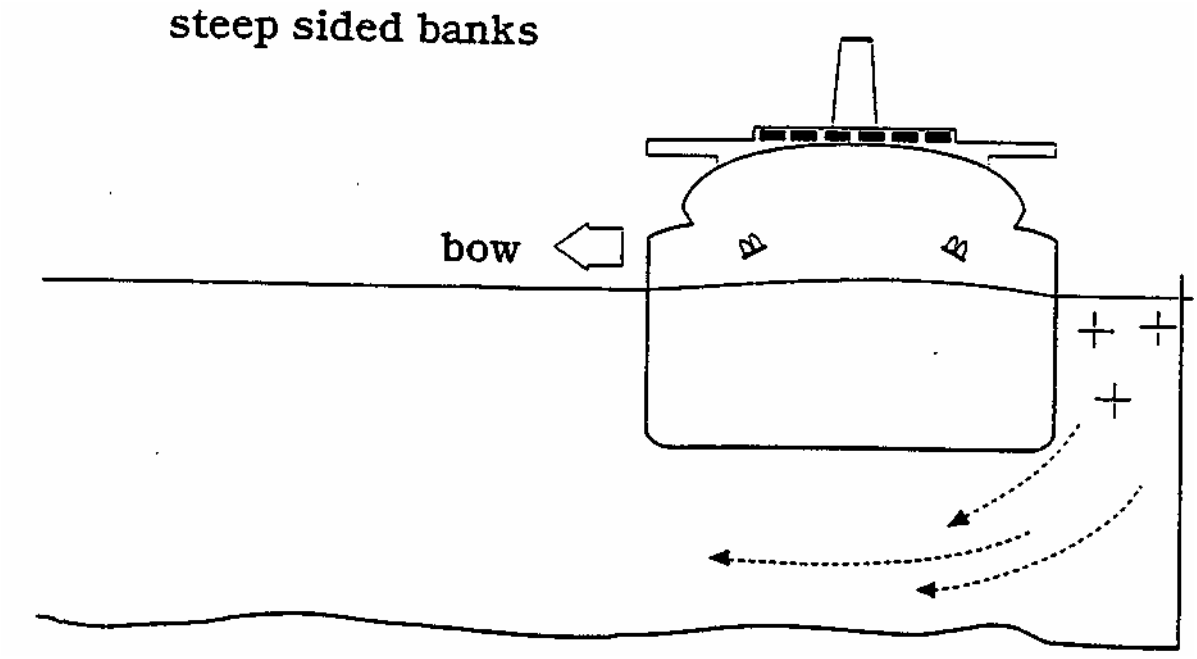

Figure 6-6 Bank configuration - steep sided

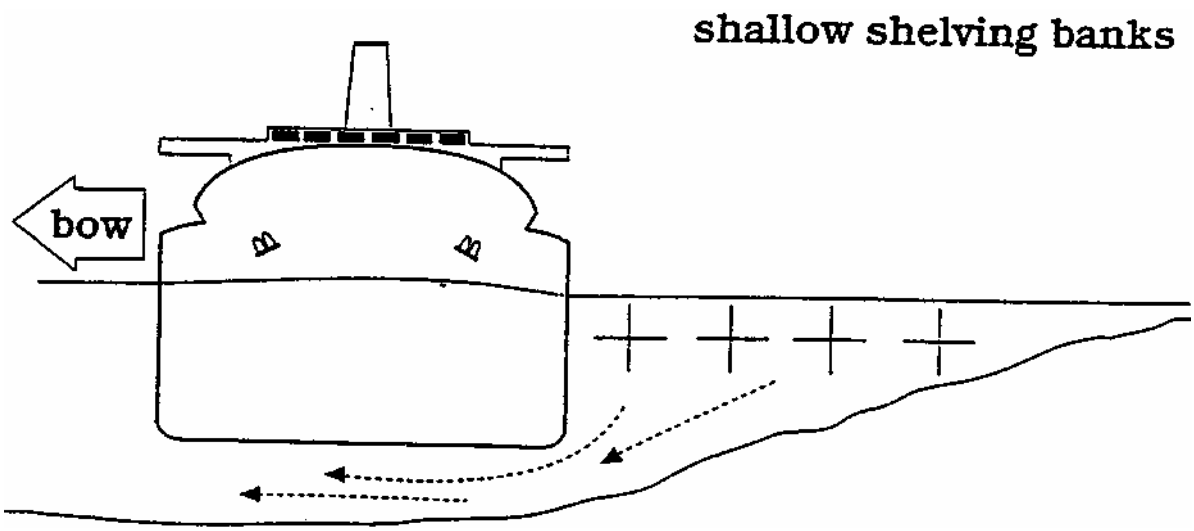

Figure 6-7 Bank configuration - shallow shelving

Passing

In the interests of both simplicity and clarity the sequence of events during a 'meeting end on' manoeuvre are contained in figures 6-8, 6-9 and 6-10.

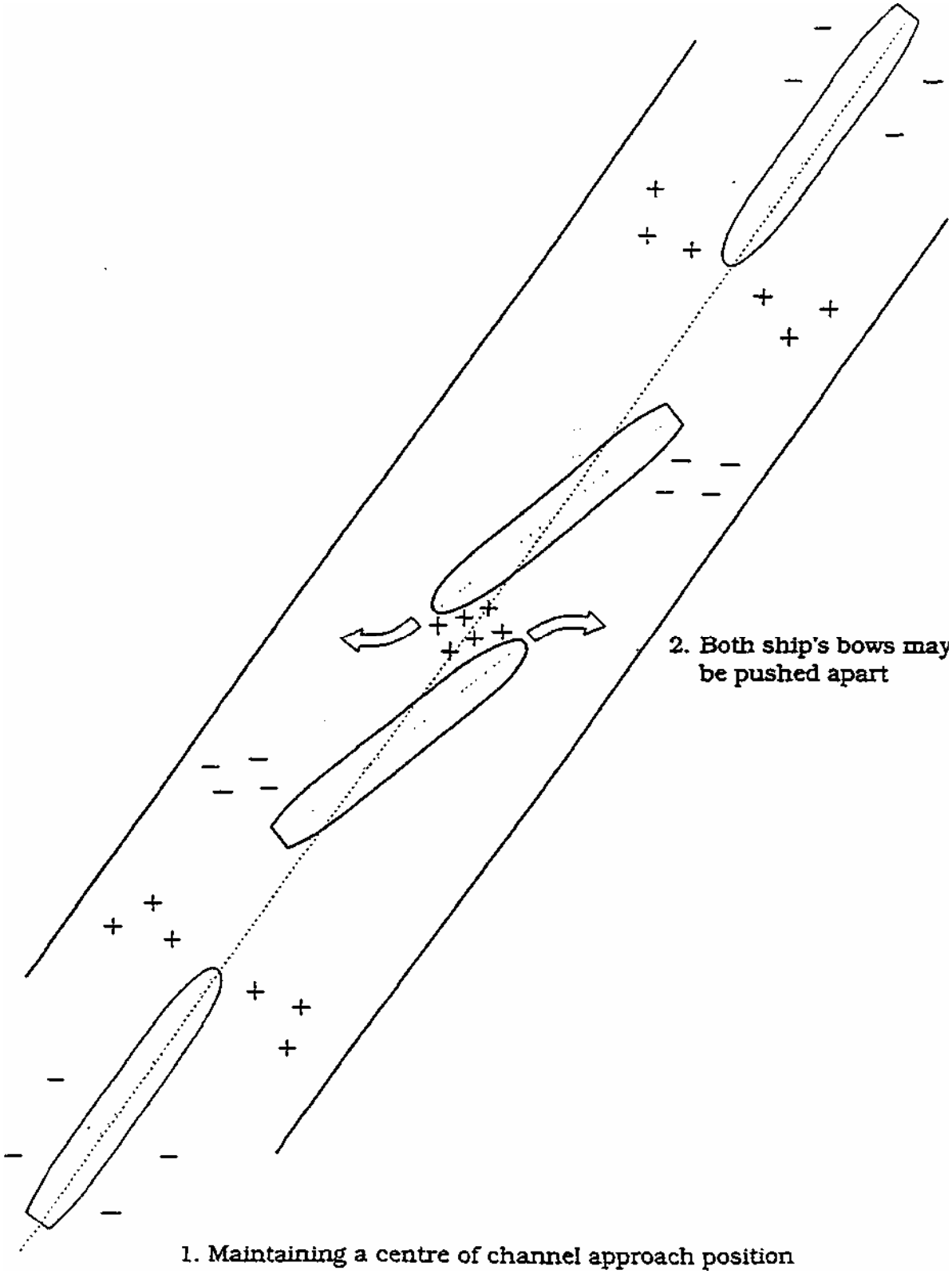

Figure 6-8 Passing - Phase 1

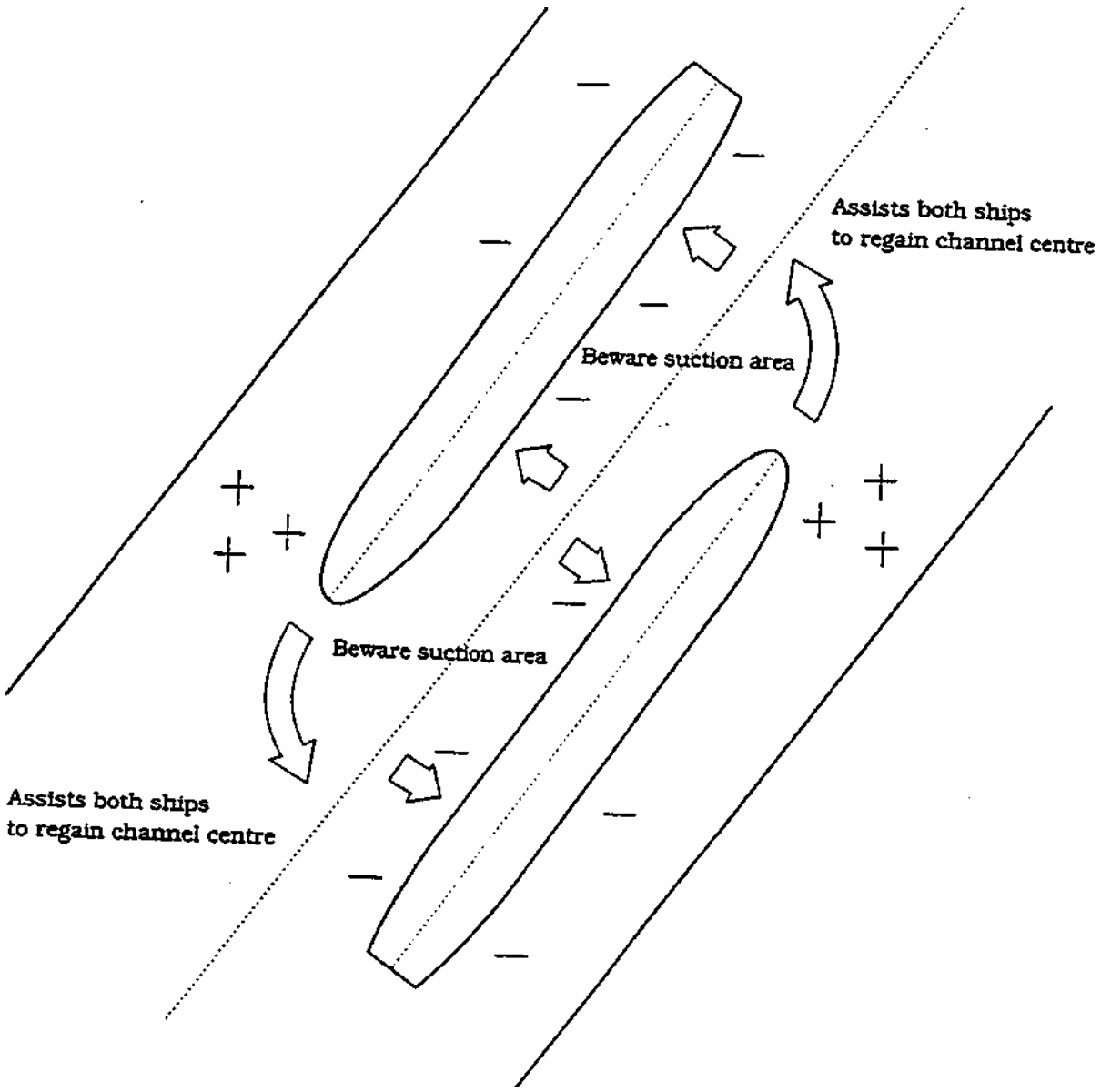

Figure 6-9 Passing - Phase 2

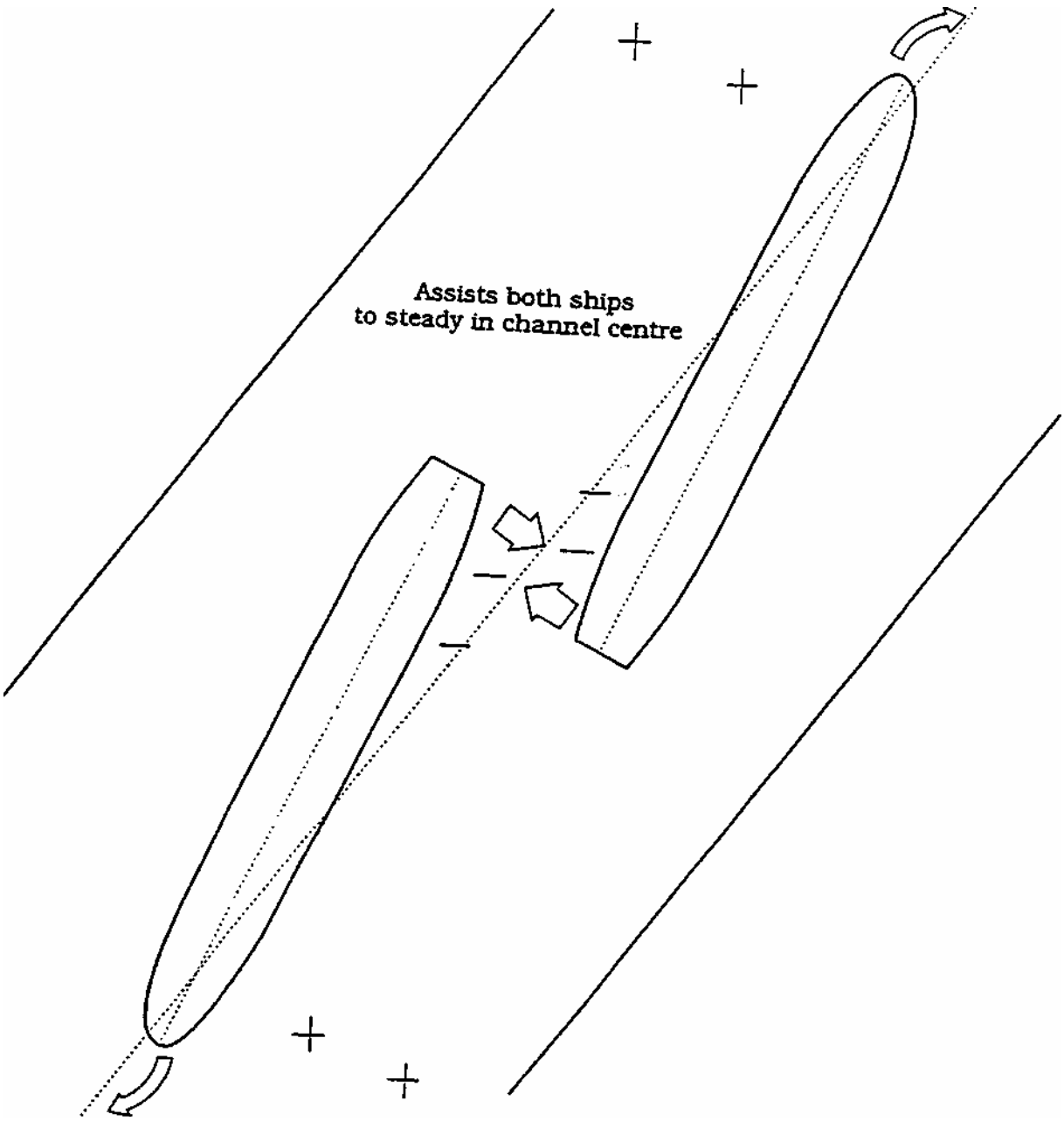

Figure 6-10 Passing - Phase 3

The overtaking operation is shown in figures 6-11, 6-12 and 6-13.

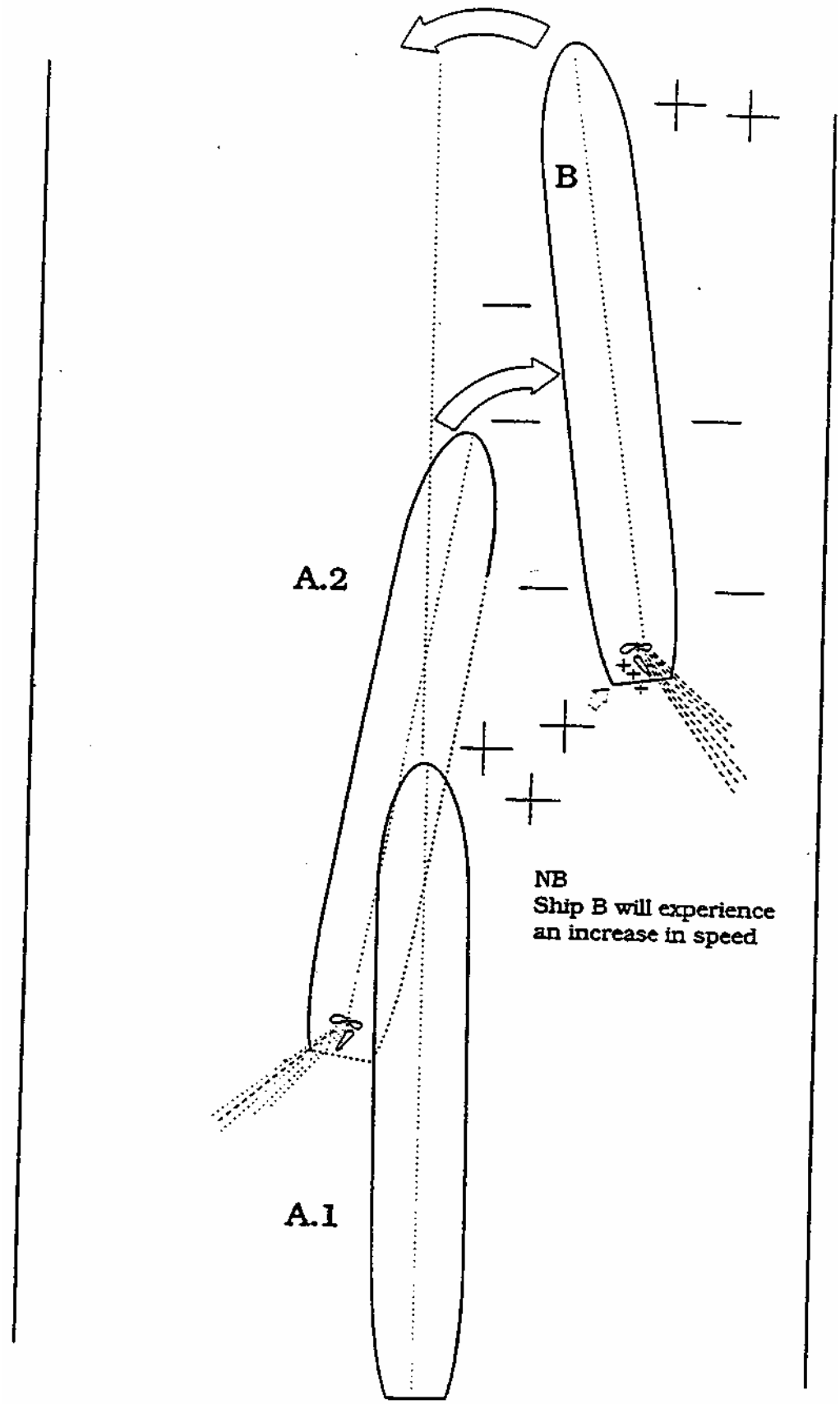

Figure 6-11 Overtaking - Phase 1

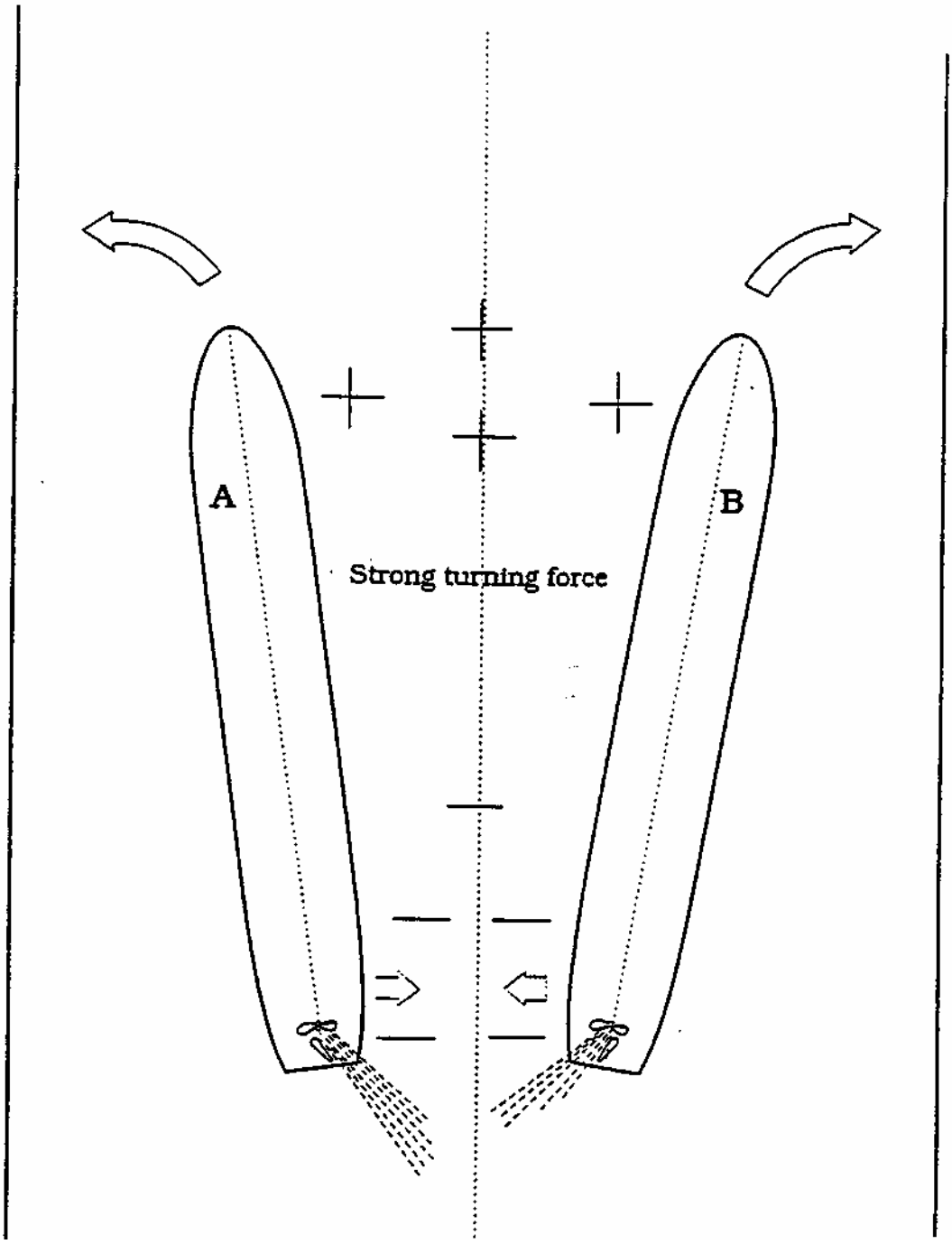

Figure 6-12 Overtaking - Phase 2

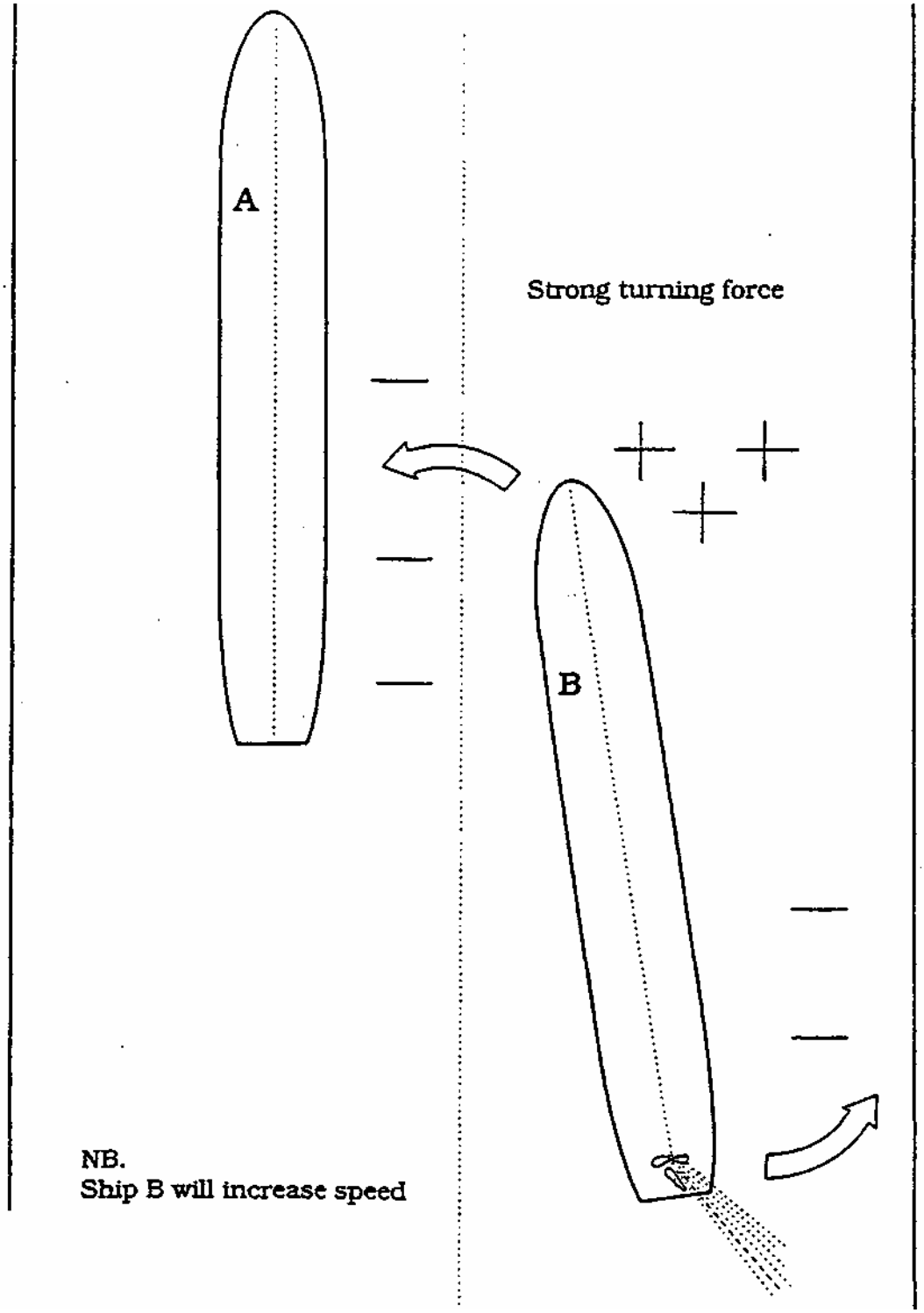

Figure 6-13 Overtaking - Phase 3

The following general points should be noted.

a) Prior to the manoeuvre each ship remains in the centre of the channel for a long as possible. Failure to do so, could expose either ship to bank effect, leading to a sheer across the path of the oncoming ship or grounding.

b) Speed should be low to reduce the interactive forces. There is then, plenty of reserve power for corrective 'kicks ahead'.

c) If the ships pass from deep to shallow water, at any time during the manoeuvre, the forces will increase drastically and extreme caution should be exercised.

d) The smaller of two ships and tugs, are likely to be the most seriously affected. Large ships should be aware of this and adjust their speed accordingly.

e) Figures 6-8 to 6-13 illustrate the anticipated sheers that may develop throughout each manoeuvre and the maximum corrective helm that may be required, in this case 35°.

f) The engines should be brought to dead slow ahead for the manoeuvre, particularly turbine or fixed pitch propeller ships,so that power is instantly available to control the ship with 'kicks ahead'.

g) On completion of the manoeuvre each ship should regain the centre of the channel as quickly as possible to avoid any furtherance of bank effect.

It should be stressed that in these notes and throughout all the other 'Notes on Ship Handling' every effort has been made to strike a balance between what is considered essential theoretical content and practical application. They are intended to be supplementary to manned model exercises, which put into practice much of their content and by giving individuals sufficient working knowledge, food for thought for the future, should they wish to investigate more thoroughly into some practical aspect of ship handling.

CHAPTER SEVEN

THE USE OF TUGS

Tugs

There are throughout the harbours, offshore installations and waterways of the world a diverse range of maritime operations, each of which has it own working practices concerning the use of tugs. These will have developed as a result of specific operational demands within an individual pilot's district which may have been influenced by some or all of the following .....

* type of ships being serviced.
* number of ships being turned around.
* environmental conditions.
* navigational constraints.
* size and type of tugs available.
* fiscal considerations.
* inherent historic or traditional practices.
* experience levels of personnel involved.

Given such a wide sphere of operations across the world, it is obviously difficult to develop general instructional material for tug operations. Not surprisingly, in some cases, it may come into conflict with more specific individual working methods which naturally take priority and this is fully appreciated and understood.

A pilots' initial expertise with the use of tugs is frequently restricted to what can be gleaned from the advice of senior pilots and colleagues during training, sometimes a brief period as an observer on a tug, and thereafter personal experience.

With these points in mind this chapter is intended solely as a basis from which to start and to assist officers and pilots in developing or reinforcing their own ideas and experience when using tugs.

To gain a broad insight into the use of tugs, it is first important to be aware of the types of tug commonly available and in particular their strengths or weaknesses. To do this it is helpful to group the many different types of tugs according to their working methods and this provides the following broad categories .....

* conventional tugs.
* tractor tugs.
* azimuth stern drive tugs (ASD).

Conventional Tugs

The conventional or traditional tug, for years the work horse of the maritime industry and still widely employed, has two inherent design features which can, by modern standards, limit its efficiency. These are .....

* the traditional propulsion unit.
* the towing hook position.

The propulsion unit is usually a single right or left handed propeller with a standard rudder configuration, not unlike many small vessels world wide. To increase bollard pull, with the installed power unit, the propeller may be placed in a shroud or rotating nozzle, some may have controllable pitch screws and some may be twin screwed. Whilst they may be economical, powerful, have good sea keeping qualities and be well proven over the years, they may, nevertheless, by modern standards, be restricted by fairly basic manoeuvrability.

This means that the conventional tug, if required to do so by the pilot, might be slow and sometimes limited in its ability to reposition quickly. The tug's master must also be very careful to avoid difficult situations whereby the tug may become trapped and unable to manoeuvre freely to a safer position, if it is beyond its handling capabilities.

Like most traditional vessels, propulsion is at the stern, and this dictates the design position of the towing hook. When a tug is making way as an ordinary vessel, with no tow connected, or when making way and towing, but the tow line is slack, the pivot point will be approximately a 1/4 of the length of the tug from forward and the tug may be expected to handle like any other conventional vessel.

Once however, a tow is connected (see figure 7-1) and the tug takes the weight, it is likely that the pivot point (P) will move aft towards the position of the towing point or hook, which will usually be as far forward as design permits and as near amidships as possible. Although the distance of (P) from the propeller and therefore thrust (T) is now reduced, it is still substantial and the tug retains a good turning moment (PT) and a fair degree of manoeuvrability under the tow.

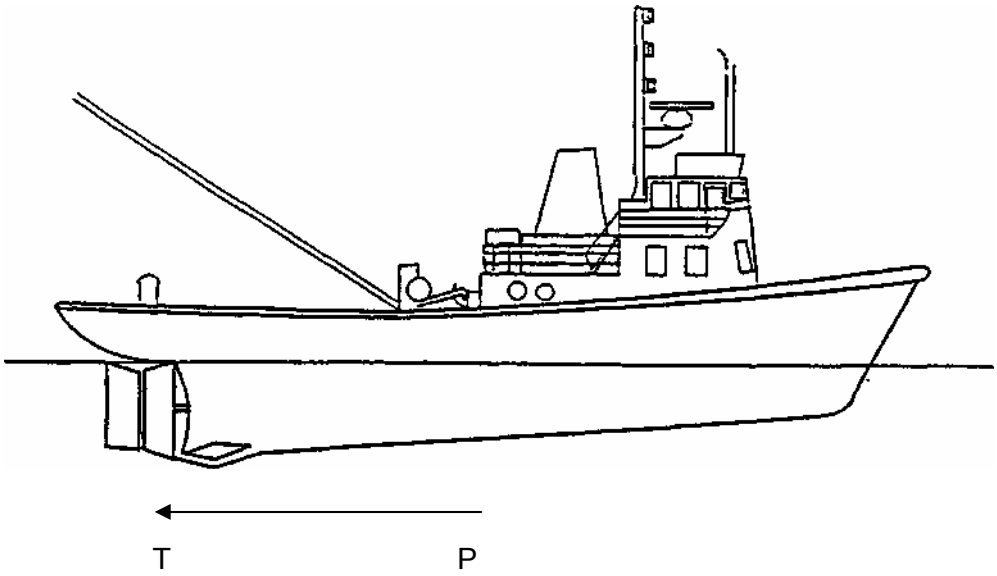

Figure 7-1 Conventional tug - without gob rope

If, however, any attempt is made to rigidly fix the tow, at or closer to the stern (see figure 7-2) it results in a large or total reduction of (PT), which will affect a serious loss of manoeuvrability. The towing hook therefore needs to be positioned as far forward of the propulsion unit as possible, thus allowing the tug freedom of movement under the tow line.

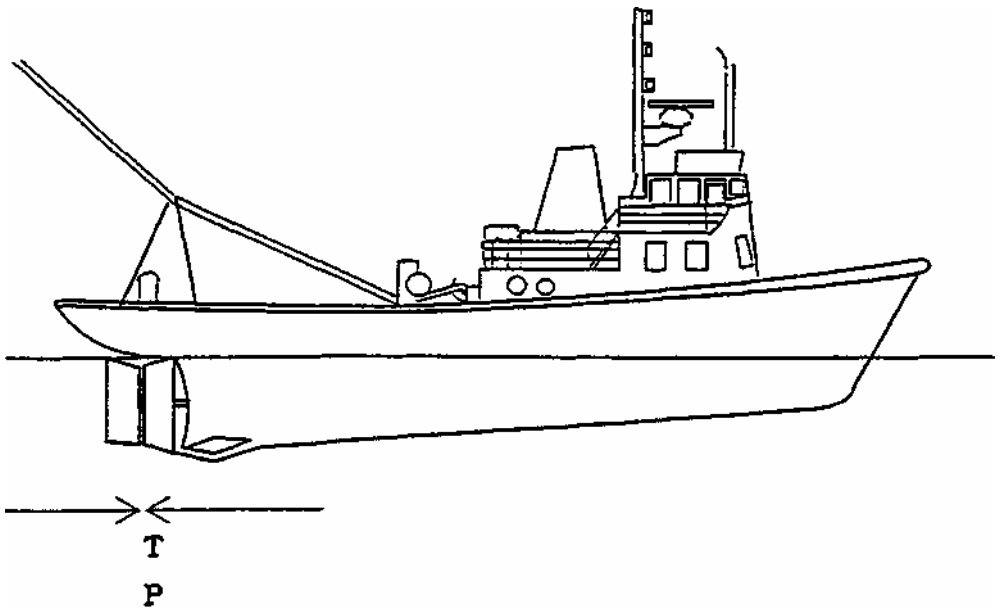

Figure 7-2 Conventional tug - with gob rope

This combination of towing hook amidships and limited manoeuvrability, has a tendency to place the conventional tug at particular risk to either interaction or girting.

Interaction Forward

In 1950 a leading tug manufacturer conducted a research programme into a large number of tug accidents all of which had resulted in the loss of life. The most common cause of these accidents was found to be "interaction". Since then the size of ships using tugs has increased enormously and the tug, still relatively small and often working alongside, must be very much more at risk from this invisible phenomenon.

In simple terms, a ship making headway through the water has zones of differing water pressures surrounding it. This results in a positive pressure forward of its pivot point extending out from the ship, whilst a low pressure or suction area exists all the way down the ship's side from the pivot point to the propeller, (see chapter 6 - Interaction). Near the stern this suction area is augmented by the flow of water into the propeller aperture whilst the engine is turning ahead and, it should be noted, at any time whilst controllable pitch propellers are engaged.

It should be remembered that the strength of these interaction zones and the distance they extend out from the ship can increase dramatically, not only with a small increase in ship speed but also if the ship passes into shallow water and the pressure zones are restricted.

When a tug is working its way in towards the ship's forebody, with the intention of passing a line forward, it may pass through one or more of these important areas (see

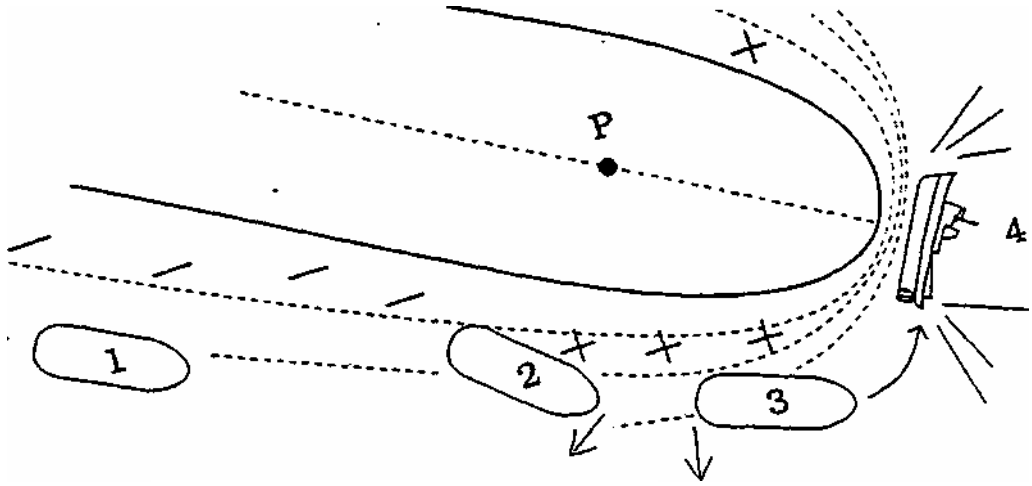

Figure 7-3 Tug interaction - forward

figure 7-3) and experience adverse handling characteristics.

In position 1 for example, and similarly all the way down the side of the ship, if the tug is allowed to get in too close, it might, despite all the efforts to prevent it, be bodily and inexplicably sucked into the ship's side. This might occur unintentionally in strong winds, when a tug is in the lee of a large ship which is drifting down upon it. Once trapped alongside it can be extremely difficult to get off again, unless the ship's speed is substantially reduced thereby relaxing the strength of the suction area. For the unfortunate tug master, this can be the start of a chain of handling difficulties which can accumulate and end in disaster.

In position 2 the tug is again working in close to the ship's side and passing through an area where it is half in and half out of the respective pressure and suction zones. A positive force is pushing the bow out from the ship, while another force is pulling the stern into the ship. This combined turning couple will create a strong shear away from the ship which will require rapid and bold use of both helm and power to correct it.

When working close in under the bows, in position 3, the tug may have run slightly ahead of the ship's bow pressure zone and consequently find a very strong positive force being exerted on the stern and rudder. This will give a similar effect to that of putting the helm hard over towards the bow of the ship and the tug could sheer rapidly across its path. Bold corrective counter rudder with power will be needed instantly, but even then may be ineffective against a force which can be very strong.

If the ship's speed is too high and the interaction forces correspondingly severe, or if the tug master fails to keep control, the tug can find itself in position 4 with alarming and fatal rapidity. The consequences may be flooded decks and serious collision damage, particularly from underwater contact with the ship's bulbous bow, with the possibility of capsize and loss of life.

A sudden and catastrophic loss of stability is the most likely cause of a capsize and this can occur even with a very slight collision. Tugs, it should be noted, roll over and flood extremely quickly, thus affording little time for the crew to escape!

Interaction Aft

When a tug is approaching to pass a line aft it is also likely to feel the effect of interaction and may, similar to the forward tug, experience some handling difficulties. This will be particularly evident if the ship's speed has not been sufficiently reduced. The resultant interaction forces may be too strong, causing vigorous suction, or low pressure area, around the after body of the ship (see figure 7-4). This is compounded by the more obvious and widely recognised risk that is associated with working under the stern, in close proximity of the ship's propeller.

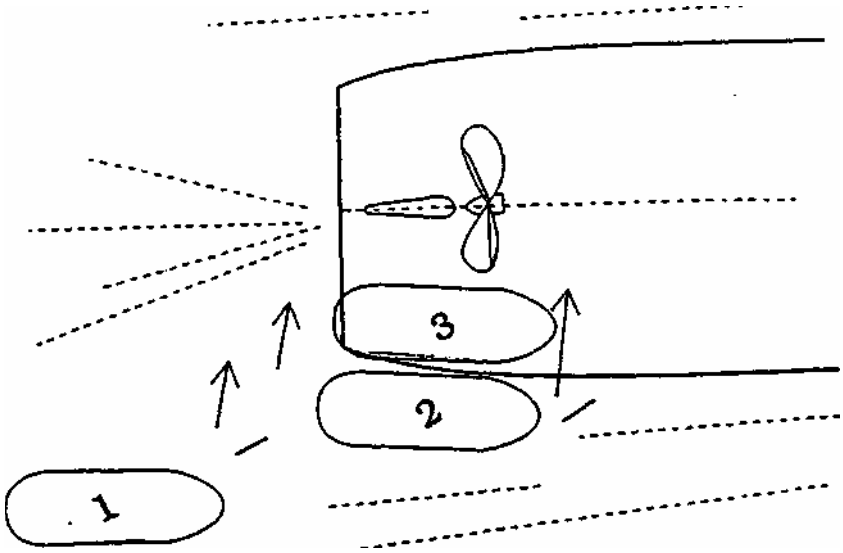

Figure 7-4 Tug interaction - aft

When a tug makes its approach and is in, for example, position 1, it will be influenced by this suction and may start to take a sheer towards the ship's stern. As this maybe a low pressure area, the tug will have less water resistance ahead of it and may also experience an unexpected increase in speed. Unless quick action is taken, with counter rudder and appropriate power, the tug will be drawn unwittingly into the stern of the ship and become stuck somewhere alongside in the region of position 2.

Extreme cases are possible, when the forces are so strong that the tug fails to respond to full rudder or power and may inadvertently land heavily alongside. If the ship is in ballast, partly loaded or has a large overhanging stern the tug could be drawn into position 3, with the possibility of serious structural damage to the tug's superstructure and upperworks.

The danger from the propeller is a more obvious threat and, naturally, care should be exercised whenever a tug is working close under the stern. Whilst it is the safest 'best practice' for a conventional propeller to be stopped it is not always practicable, particularly with controllable pitch propellers, and the tug's master should always be kept fully informed as to the status of the propulsion unit when coming in close. This is, in any case, a good policy to adopt during all tug operations.

Whilst procedures vary from port to port, some tug masters may opt to make their approach in relative safety from dead astern, on the centre line of the ship. When close in, bow to stern, the first line is passed down to the tug's bow and then the tug eases out to a safer position, to complete making fast and taking up station.

Girting a Tug

There have, in the past, been serious accidents involving tugs that have resulted in a tragic loss of life, and which have been caused by a phenomenon known variously as girthing, girding or girting, in differing parts of the world. With their towing hook amidships conventional tugs have always been vulnerable to girting and their basic manoeuvrability makes it all the more difficult to extricate this type of tug, should it be caught in such an unenviable position. It can be caused by one, or both of the following .....

* the ship turning independently and too quickly away from the tug.
* excessive straight line speed with a tug made fast.

Let us look, at an example of a common situation, with a conventional tug forward on a long line.

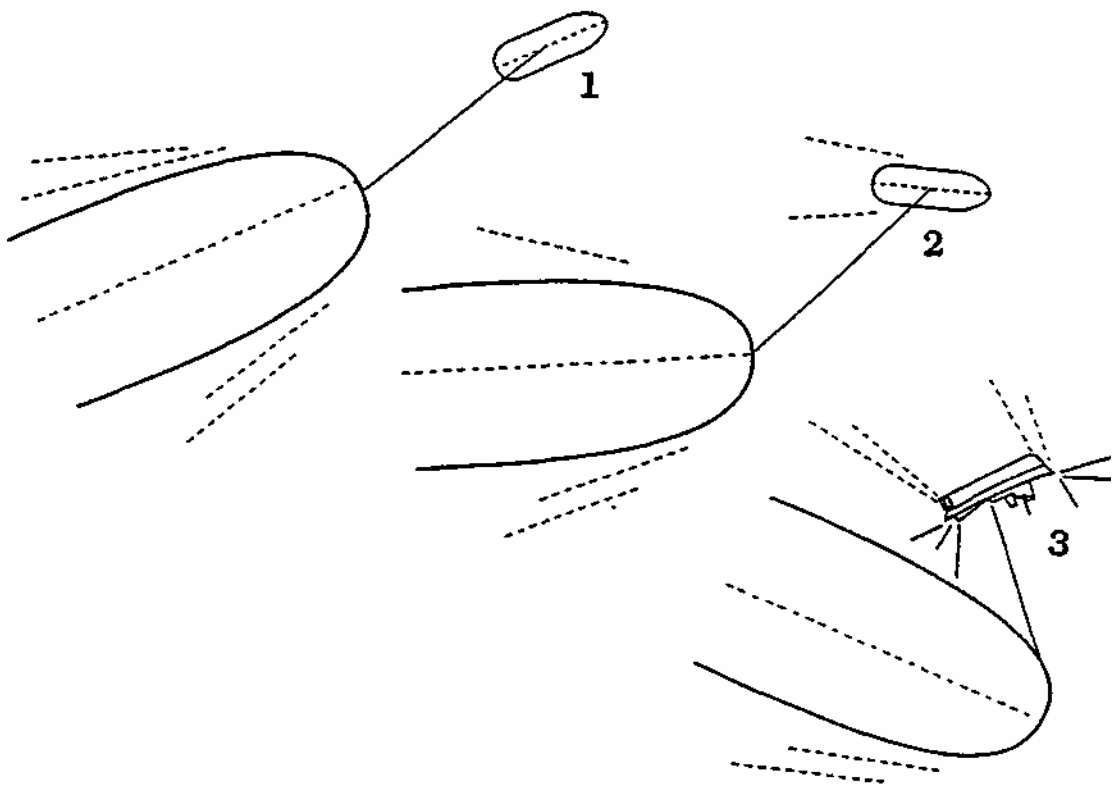

Figure 7-5 Girting a tug - secured forward

Position 1 - in this area the tug is relatively safe and regardless of whether the ship's speed is too high it does not result in any immediate problem, provided it remains with a small angle on the bow. Whilst it can remain in attendance such a small arc of relatively safe effectiveness will naturally limit its operational capabilities.

Position 2 - if the tug is out in this position broad on the bow, the ship could as a result of too much starboard helm or excessive speed, or both, outrun the tug which may have neither the time nor manoeuvrability to turn and keep up with the rapidly swinging or accelerating ship.

Position 3 - this is the worst possible situation where the tug is being pulled around on the radius of the tow line and because of the position of its hook, is then dragged along with the tow line out on its beam. Due to the nature of the forces involved, it will also be pulled over to a dangerous angle of heel and unless the tow line breaks, or can be released immediately, the tug which is powerless to respond and already listing heavily, may capsize!

A conventional tug working aft, is perhaps more at risk than the forward tug, as its design characteristics frequently oblige it to lay with the tow line much more inclined towards its beam.

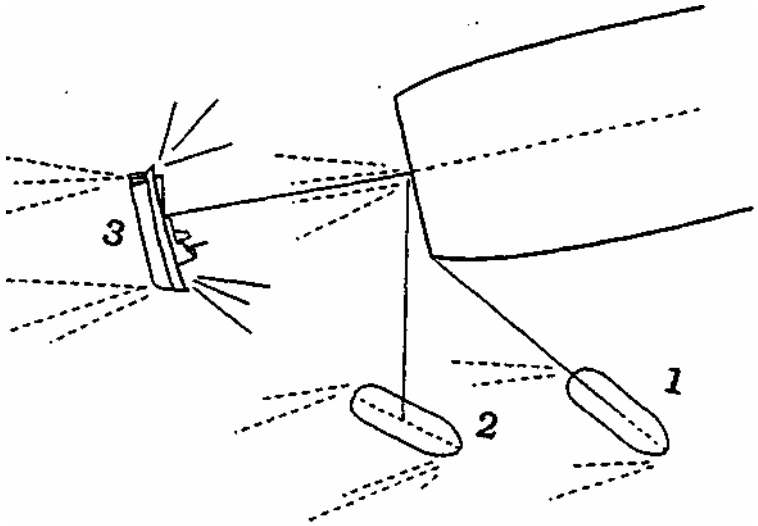

Figure 7-6 Girting a tug - secured aft

Position 1 - provided the ship is either stopped or proceeding at extremely low speeds a conventional tug can work quite efficiently with maximum bollard pull in all directions at this and any other position around the stern.

Position 2 - if the ship's speed now increases, the tug will have to work around onto a heading which is more in keeping with the ship, not only to keep up with the accelerating ship but also to maintain a safe lead with the tow line. This does, however, have a tendency to encourage the tug master to work with the tow line dangerously near the tug's beam and unfortunately also results in

substantial loss of bollard pull over what was a previously large useful arc of operation.

Position 3 - should the ship's speed become excessive, or if the stern of the ship is swung rapidly away from the tug, it may be unable to respond quickly enough and could fail to keep the safe station previously illustrated. As a consequence, the tug might be dragged around on the radius of the towline, to this dangerous position and capsized with shocking rapidity.

It is also very important to note that a tug attending a ship aft, but in the close confines of a lock, may find itself in a similar situation, but with even less ability to manoeuvre. Should the tug get caught across the lock with a ship proceeding at too high a speed it will be exposed to a very serious risk of girting.

For those unfortunate enough to have witnessed it, a tug being girted and capsized is an awesome and frightening sight. It frequently happens too quickly to activate quick release gear and allows absolutely no time whatsoever for the evacuation of the crew who may become trapped in the submerged tug.

In all these cases, the danger of girting can be removed, by tripping the quick release gear on the towing hook, thereby releasing the towing line.

The Gob Rope

The conventional tug, in comparison with the more manoeuvrable tractor tug and azimuth stern drive tug, may be at a disadvantage as a result of .....

* interaction.
* girting.
* excessive ship speed.
* confined locks and dock areas.
* traditional manoeuvrability.

In certain cases, some conventional tug masters might be seen working a gob, or gob rope in order to improve safety and performance (see figure *7-7).* This is a rope of suitable length and strength which a crewman will use on the towing deck, to bowse down or 'gob down' the main tow rope and which may subsequently be adjusted in length when required by the master.

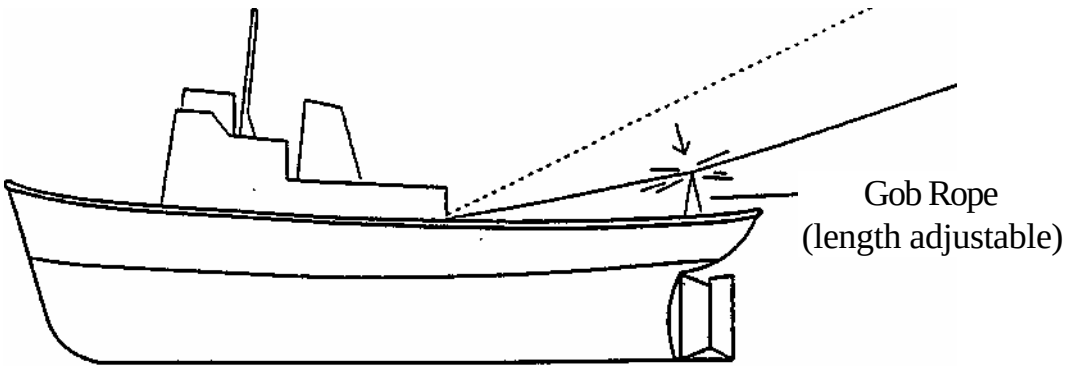

Figure 7-7 Conventional tug - working a gob rope

Its use brings the pivot point of the tug (see figure 7-1) aft to the area of the gob rope and this encourages the tug to pivot around that point and keep its stern up to the tow.

Limitations and safety

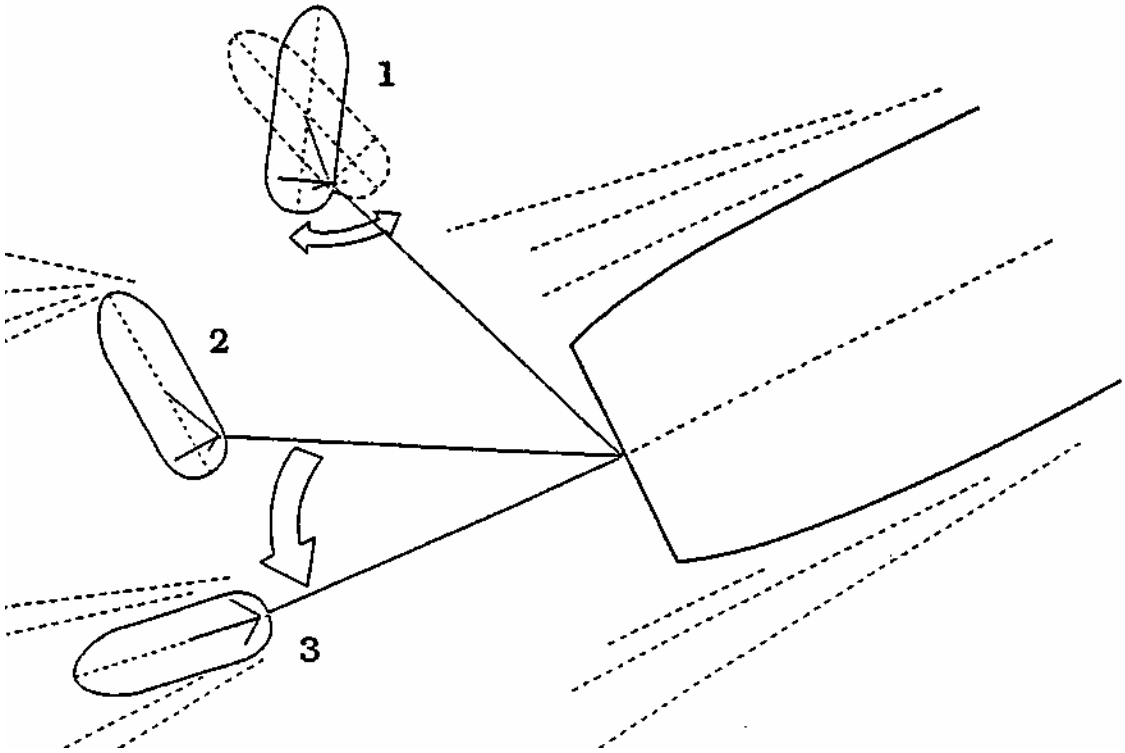

Figure 7-8 Gob rope - limitations and safety

Position 1 - once secured the gob rope clearly limits the manoeuvrability of the tug's stern under the tow line to a relatively small arc. On the other hand it is a good compromise as it helps to keep the tug's stern up to the ship. At suitably low speeds the tug can be usefully employed to dig in and assist when needed. The tug master may occasionally slacken the gob rope right off to regain full manoeuvrability if it is necessary in order to reposition the tug before taking the weight again.

Position 2 and 3 - these two positions show the tug with its gob rope secured, exposed to the risk of girting due to excessive ship speed and being swung around on the radius of the tow line. In this instance, however, because the gob rope has kept the pivot point aft it is being swung safely around by its stern thus giving the tug master valuable time during which the tow may be safely slipped.

Using the tug's weight

The conventional tug is clearly at its best when it can utilise its maximum power and apply full bollard pull to the tow line or ship when so required. Naturally, there is a tendency for this to be at its best when the ship is fairly static i.e. when swinging, positioning, breasting or lifting off etc. To the experienced mariner these movements are by and large straight forward and do not require elaborating upon.

An alternative, if the bollard pull cannot be applied directly, usually because the ship is making way, is to 'lay' on the tow line and use the tug's weight to do the job, while the power is used primarily to maintain position and headway.

The forward tug is illustrated doing this in figure 7-9. It has eased out on the bow, all the time continuing to make headway which is comparable with the ship and is laying on the tow line using its own weight, rather than direct bollard pull alone, to swing the ship's bow to starboard. This unfortunately becomes increasingly less effective if the ship's speed is permitted to build up, because the tug's effort is then wasted on keeping up with the ship and maintaining a safe position.

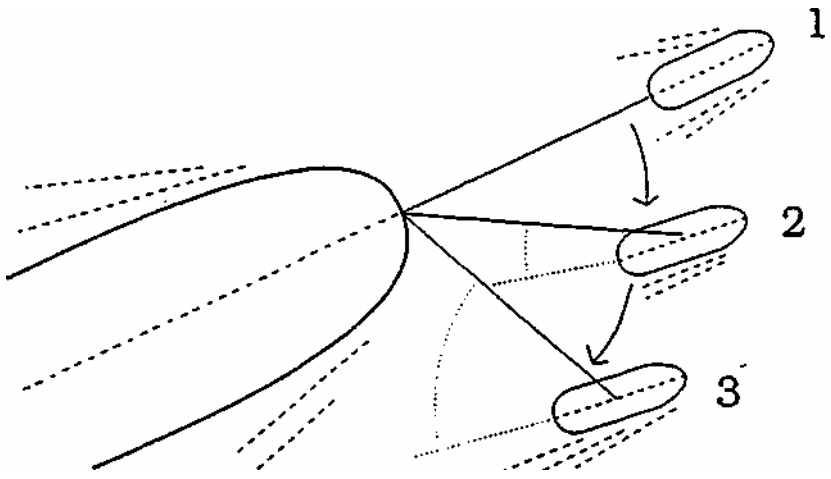

Figure 7-9 Using the tug's weight - secured forward

In comparison to the forward tug, the after tug, if it is using its main towing hook, is much more restricted in its arc of operation, and if the ship's speed is too high is usually reduced to following the ship on a slack line until required, this is shown in position 1 figure 7-10. However it can, if it is safe to do so, move out to position 2 or thereabouts and 'lay' on the tow line with its own weight, but unfortunately it must keep the tow line aft of the towing hook position. Under the circumstances this design feature seriously limits the tug's arc of operation.

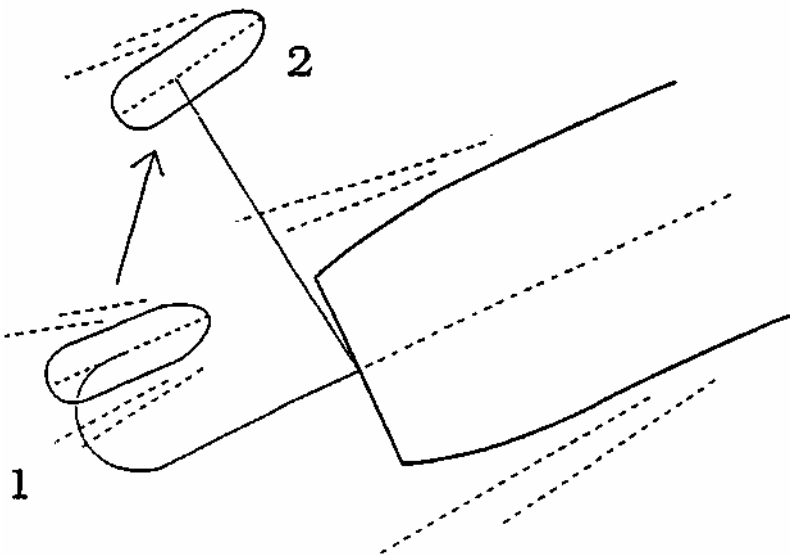

Figure 7-10 Using the tug's weight - secured aft

To overcome this limitation, a conventional tug deployed aft may occasionally be seen working with the tow line secured forward but bearing in mind that this might then have to be let go and re-secured on the main towing hook in order to work in the conventional way. This is generally considered inconvenient and not commonplace.

Two important things must be remembered if the tugs are being used in this way .....

* the risk of girting is increased and the tug master must keep a close eye on the ship's speed.

* the tugs may impart an insidious increase in speed to the ship which needs to be monitored.

Whilst there are clearly limitations associated with conventional tug design, it should not be forgotten that they have been the workhorse of the towing industry and are still economical, well proven and invaluable in the hands of a good tug master. They can be very powerful, modest horse power often belying excellent bollard pull, particularly by placing the propellers in shrouds or tunnels and the master can 'dig in' on a tow line and put this power to enormous effect. Manoeuvrability can also be improved by using twin propellers and bow thrusters. Notwithstanding this, however, manufacturers have developed totally different concepts in tug design in an effort to achieve outstanding tug performance and manoeuvrability.

Tractor Tugs

The tractor tug represents a complete departure from the traditional design of the conventional tug, but with companies like Voith Schneider and Schottel developing tractor tugs between 1950 and 1960 it is, perhaps surprisingly, not a particularly new concept.

The key to the true tractor tug lies in the use of two multi-directional propulsion units, of which some are rather like large rotating outboard motors with others consisting of rotating vertical blades. They enable the thrust units of the tug to be placed side by side more or less under the bridge, thereby facilitating spectacular manoeuvrability in the right hands (see figure 7-11). Interestingly, these units have also enjoyed considerable success for many years installed on some ferries operating in inshore waters.

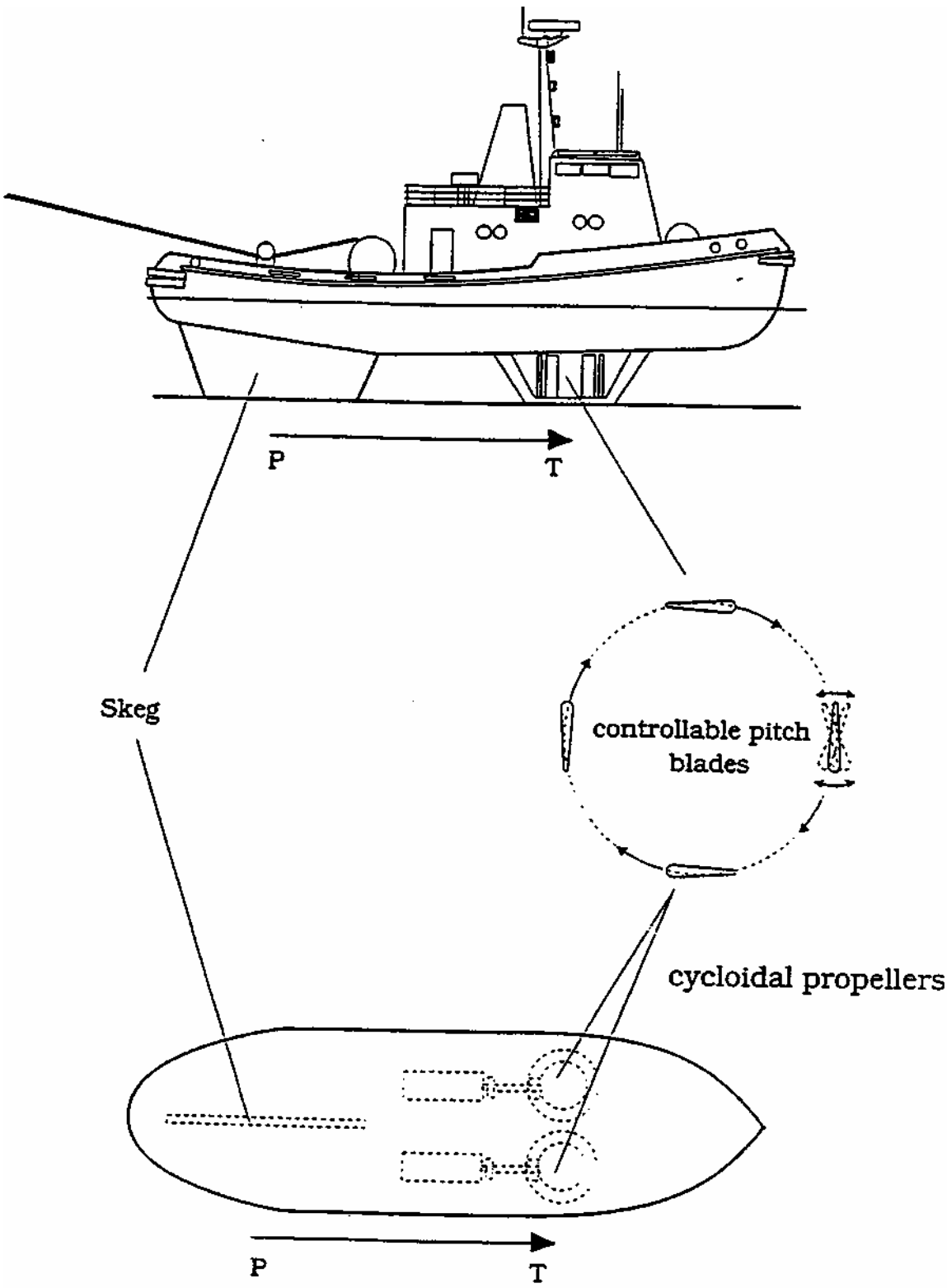

Figure 7-11 Tractor tug

On a tractor tug the towing point (P) can be placed much nearer the stern because the propulsion units, and therefore the thrust (T) is always 'outside' of the towing point, thus creating a good positive turning moment (PT). If this is compared with the conventional tug back in figure 7-2 it can be seen that this is completely the opposite to the traditional configuration.

In many cases versatility is further enhanced by working the tug's tow line directly from the winch drum with a remote control joy stick from the bridge. The tug master can thus alter the length of the tow line at will and with considerable ease.

The tractor tug can perhaps best be defined as one where, like a farm tractor towing a trailer, the power unit is always ahead of and pulling on the towing point, unlike a conventional tug where the propulsion is actually behind the towing point and pushing it.

It may be imagined, quite correctly, when steaming at speed without a tow, that with the propulsion unit thus sited this type of tug suffers from a lack of directional stability. With the power driving the tug close to the pivot point, the steering lever is indeed poor, but this is easily overcome by the versatility of the thruster units. When first learning to drive such units this initially feels a little quirky but it does not take long to get accustomed to it. Directional stability is also improved by fitting a large skeg on the centre line of the hull aft and this also supports the tug if it is dry docked or grounded.

The argument for and against tractor tugs by comparison with conventional tugs, remains a matter of individual requirement being perhaps best summed up with a brief resume. Firstly the advantages, which have to some extent already been outlined .....

Advantages of Tractor Tugs

* full thrust over 360 degrees.
* rapid power-on response time.
* outstanding manoeuvrability.
* able to re-position quickly if so required by the pilot.
* simple control systems.
* very low risk of girting.
* can more effectively overcome interaction forces close in to a ship.
* improved operational capability in a restricted area such as a lock or an enclosed dock.
* may decrease the 'turn round time' of port movements that normally use tug assistance.
* reliable, robust propulsion units.

It is reasonable, therefore, to view these types of tugs as extremely versatile, ideally suited to the confines of a busy harbour, river, canal or sheltered estuarial waters. There may of course be disadvantages and the following list, which is by no means exhaustive, illustrates a number of important considerations.

Disadvantages of Tractor Tugs

* high capital investment costs.
* less bollard pull per kilowatt power.
* repair and maintenance of complex underwater units may be expensive.
* handling in an open seaway is poor due to the short distance between pivot point and thrust, creating a short steering lever.
* heeling angle with full side thrust may be up to 21 degrees with some tugs. Therefore, risk of damage can exist when laying alongside a ship.
* sophisticated underwater units may be damaged if grounded and/or fail if choked with debris.
* draft may be up to 5m, which is large in comparison to conventional tugs.
* the re-training of conventional tug masters is essential in order to fully maximise a tractor tug's potential.

Azimuth Stern Drive (ASD) Tugs

There are throughout the many pilotage districts of the world, but particularly so in Japan and Australia, a substantial number of tugs known as azimuth stern or 'Z' drive tugs (see figure 7-12)

This tug is not, strictly speaking, a tractor tug in the true sense of the word but more of a compromise, utilising some of the benefits of both conventional and tractor tug alike. It can employ two towing positions, one amidships and one forward, and main propulsion is from two rotating azimuth units which although similar to those employed in tractor tugs, are placed aft, rather like a traditional twin screw tug.

The ASD tug can therefore be used in the same manner as a conventional tug, using the amidships towing position but with considerably improved handling. However, it is when using the forward towing position, usually direct from a bow towing winch, that the ASD tug realises its full potential secured alongside a ship in the push-pull mode. With virtually the full length of the tug between the thrust units (T) and the forward towing point (P) the ASD tug can be used to great effect. It is perhaps best compared to the pure tractor tug by listing its relevant advantages and limitations.

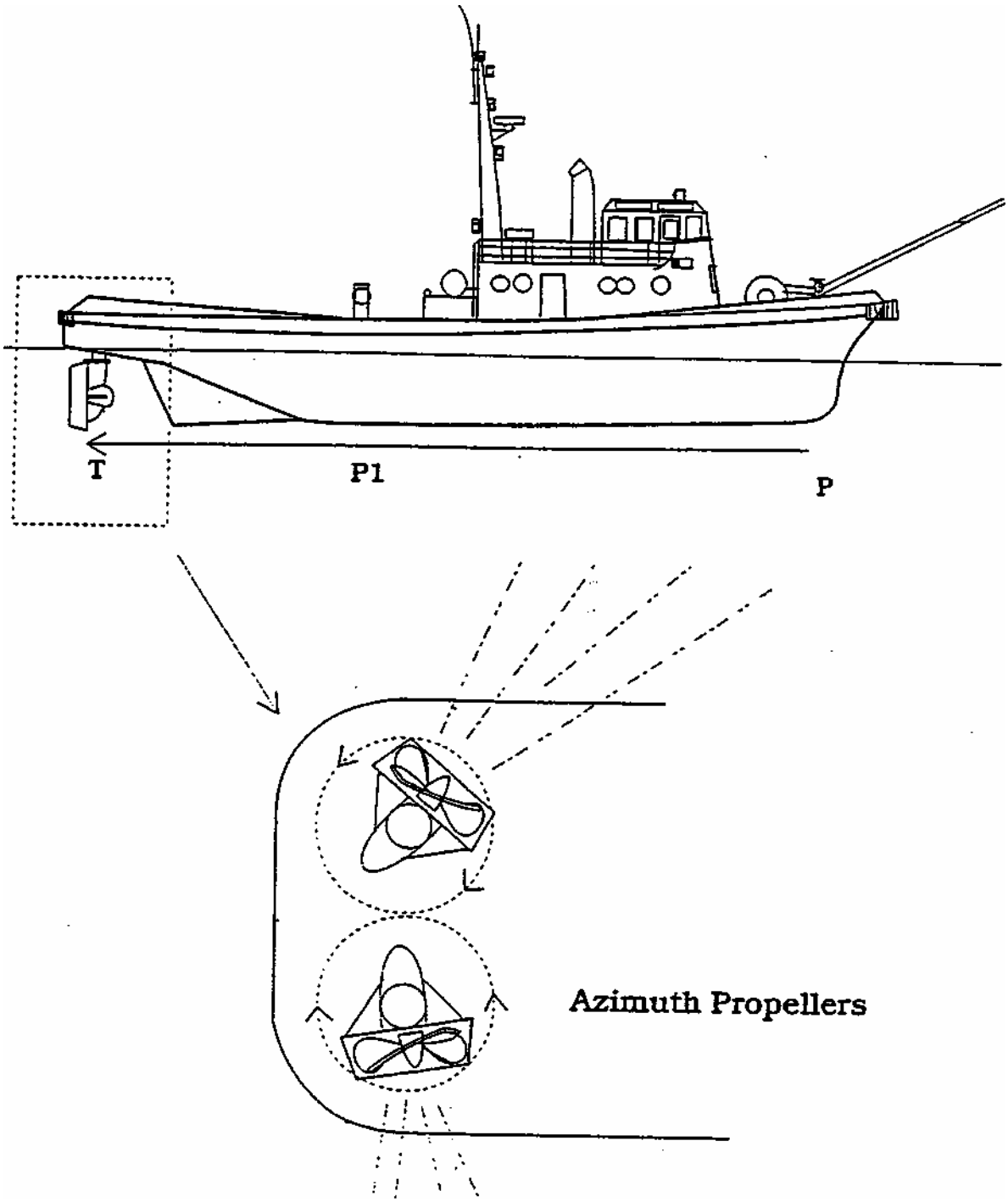

Figure 7-12 Azimuth stern drive tug

Advantages of an Azimuth Stern Drive Tug

* better directional stability at speed.
* more suitable hull form for open waters and working in a seaway.
* improved bollard pull per kilowatt power.
* azimuth units easy to withdraw for maintenance and repair.
* maximum heel with side thrust less at 15°.
* shallower average draft of 3m.

Limitations of an Azimuth Stern Drive Tug

* side stepping ability not as good.
* squat at the stern and flooding of the aft deck has been known to occur with certain design types when backing with full power.
* still susceptible to girting when using the after towing position.
* slightly more at risk from the effects of interaction.
* it is not uncommon for 99 % of all towing to be limited to the forward position.
* complex control systems.
* more susceptible to rubbish damage in propellers.

Combi tugs

Although not common there are some tugs in use that should, nevertheless, be mentioned, which fall into a category best described as 'combination' or 'combi' tugs. Generally speaking, these are older conventional tugs that have been retrofitted with some type of thruster system forward to supplement their traditional propulsion system. This may be anything from a simple standard tunnel thruster to a sophisticated retractable azimuth thruster unit and will improve handling characteristics accordingly.

Mixed Fleets

Many pilots will find themselves working for port authorities that are served by tug companies which are only operating substantial numbers of older, conventional tugs with perhaps, at best, just one or two modern tractor tugs. Pilots often comment that these are sometimes under utilised and that this is due mainly to the inadequate re-training of tug masters, resistance to changing methods of operation, or perhaps even a little bit of both.

This is largely historic, as it is an unfortunate fact of life that only in countries previously devastated by war and with the opportunity to rebuild stocks from scratch, or countries with strong growth industries building new ports or terminals, will you see substantial numbers of modern, powerful tractor tugs.

Elsewhere one can understand the dilemma of the tug operators, because it would not be any easy matter financially to update a large fleet of conventional tugs, which may still represent a comparatively recent capital investment, with costly tractor tugs that may also require new training programmes and higher maintenance budgets.

It will therefore be essential, for a long time to come for both pilot and ship master alike to have a broad understanding of the working methods associated with both the tractor tug and the conventional tug, so that the best results can be achieved when a ship is attended by both types or a mixed fleet of tugs.

Working a tractor tug forward

Figure 7-13, positions 1 and 2, shows the tug using its aft towing point and working in a similar manner to a conventional tug. Provided the ship's speed is sensibly low it can work around the radius of the tow line quickly and efficiently and thereby assist the ship with 'swinging' or 'positioning'. If, however, it is exposed to the risk of girting it will, unlike the conventional tug, be towed stern first in relative safety.

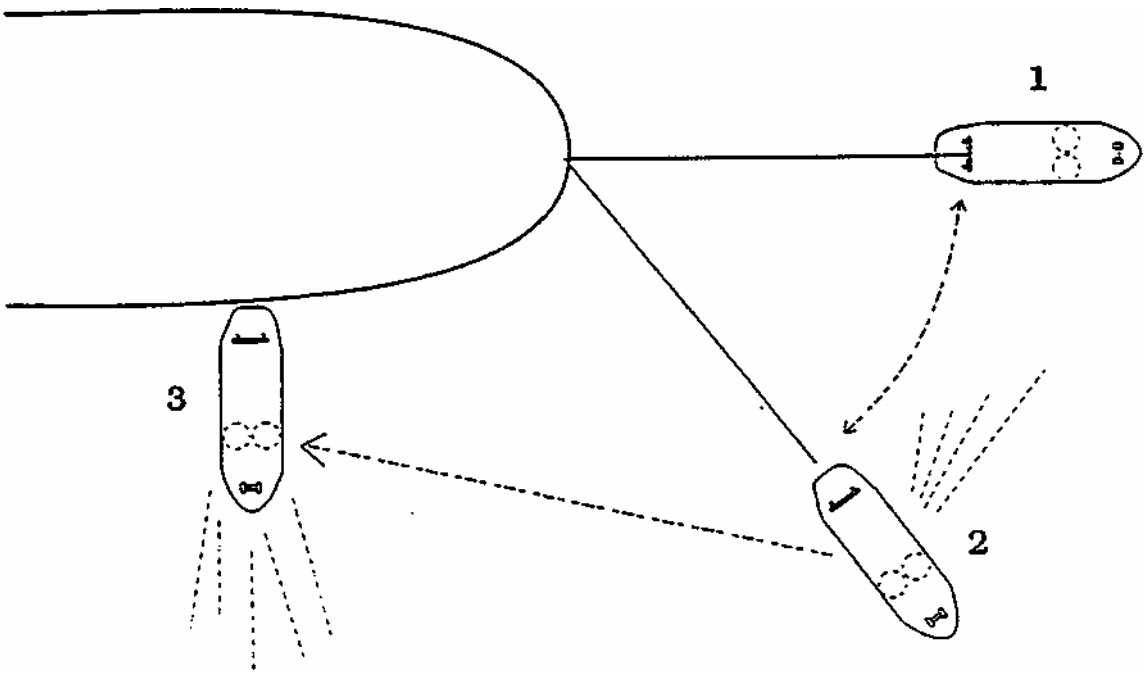

Figure 7-13 Tractor tug forward

If required by the pilot the tug can quickly move in and reposition alongside, shortening but retaining the tow line, particularly if it is on a remote control winch drum, to give good push-pull assistance during 'breasting' (position 3).

Figure 7-14, position 1, shows an option whereby the tug is using a forward towing winch and is able to adjust the length of tow as required. It may occasionally be favoured as a quick method for 'lifting off' from a berth during departures, the tug also being able to move in to push or check the ship. It is, however, rare and not commonly practised.

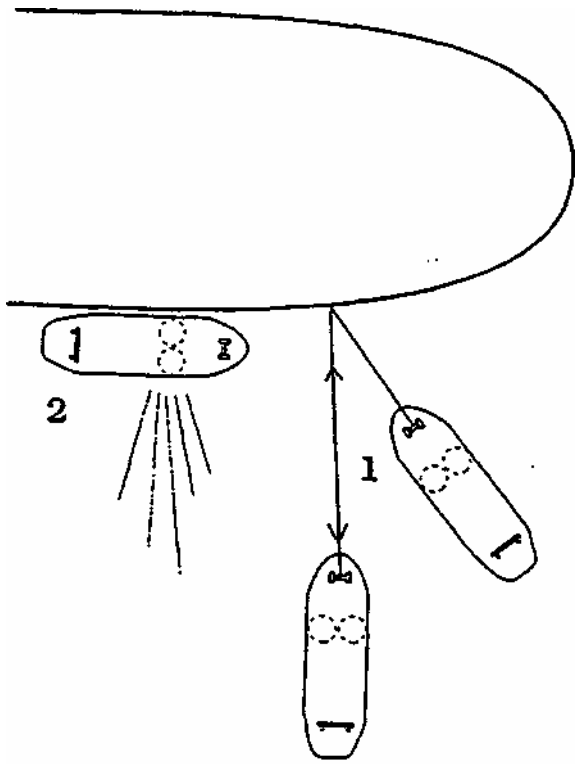

Figure 7-14 Tractor tug forward - some alternatives

Position 2 shows a familiar working mode in some countries, notably America and Japan, and also elsewhere in some multi-tug operations involving large ship movements, where the tug is 'lashed up' alongside.

As previously discussed, some caution is needed by the tug in this position, as the heeling angle on full side thrust can be potentially damaging. Furthermore 'backwash and turbulence' due to the close proximity of the ship's hull will almost certainly combine to limit the full effectiveness of the tug, most predominately when lifting off with a lot of power.

Working a Tractor Tug aft.

The following figure, 7-15, illustrates the use of the tractor tug secured at the stern.

Position 1 shows an excellent towing position again much favoured in Japan and the USA, and particularly good when moving 'dead ship' where the tug, to some extent, acts as a replacement rudder and propeller for the ship. To be reasonably effective the tug needs to be as far aft as possible, but it should be noted that the limitations associated with a tug working alongside, as mentioned in the previous example, may still apply.

Position 2 demonstrates a working method most commonly associated with channel escort work, or any other occasion when a ship is in transit and requires tug assistance whilst making way. In this particular task the tractor tug really comes into its own and is vastly more effective than the conventional tug. The tug is secured at its aft tow point, escorting the ship stern first at reasonably modest speeds. (It is fair to say, that most ASD tugs can do this as well, using their forward towing point.)

Position 3 displays that with relatively little effort the tractor tug can ease out onto the ship's quarter to the position illustrated in this example. By putting a little tension on the tow line and using a combination of the tug's weight and water pressure it can assist the ship very effectively in swinging and steadying when it is necessary. This useful technique is known as the indirect towing mode or 'paravane effect' and it has proven successful even when escorting very large deep draft vessels.

In the indirect towing mode, when engaged at the stern of a ship, the pull on the tow line can be increased by a factor of 1.5 to 2.0 times the bollard pull. The large underwater skeg of the tractor tug makes it particularly efficient at achieving this increased pulling power.

With its excellent manoeuvrability and inherent safety, the tractor tug aft can also readily assist the ship with slowing down or 'braking'. Once the ship is subsequently either stopped, or slowed to a minimal speed, the tractor tug can work around the radius of the tow line using its excellent manoeuvrability or should it become necessary, move in quickly to reposition for work alongside, (position 4)

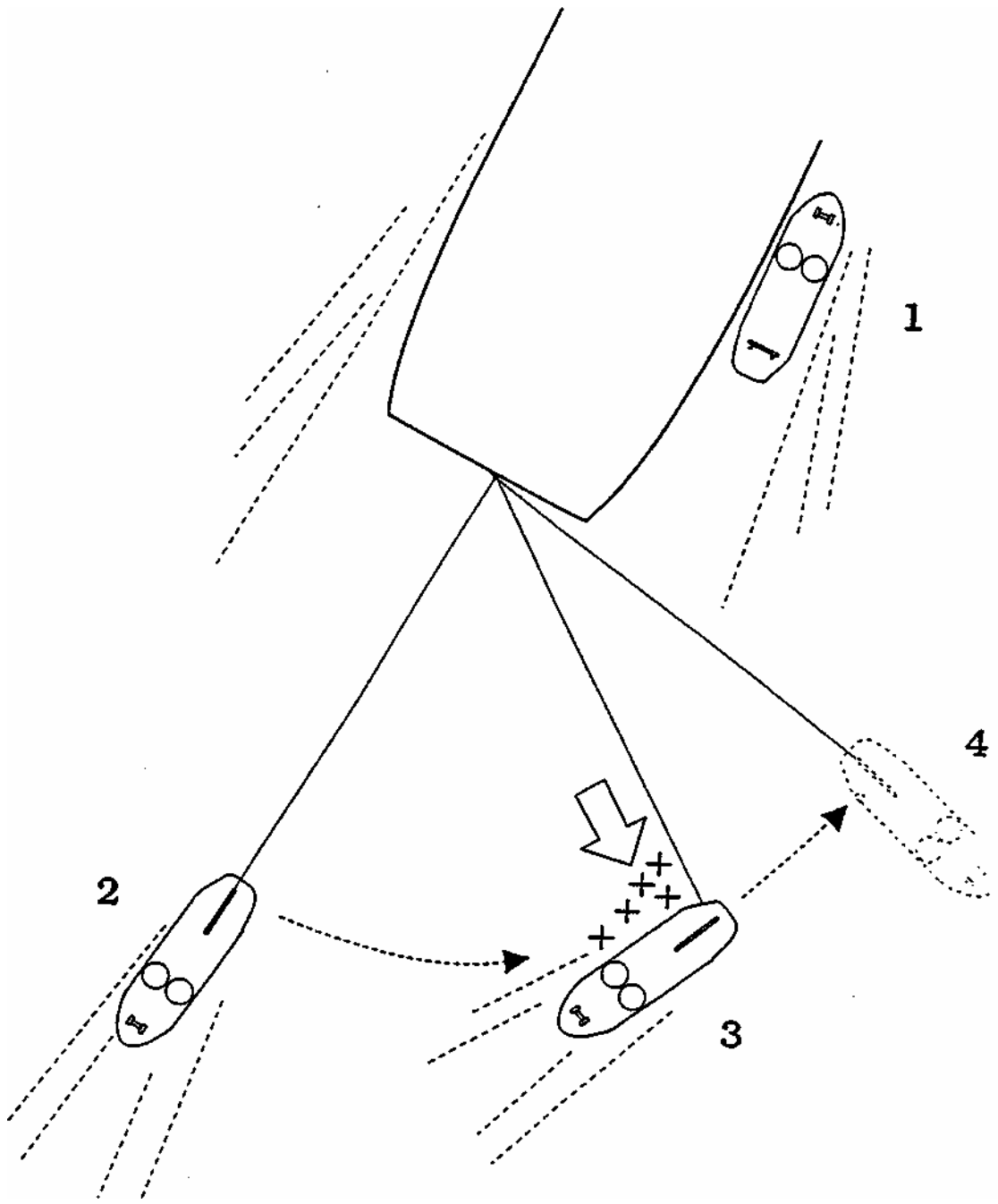

Figure 7-15 Tractor tug aft

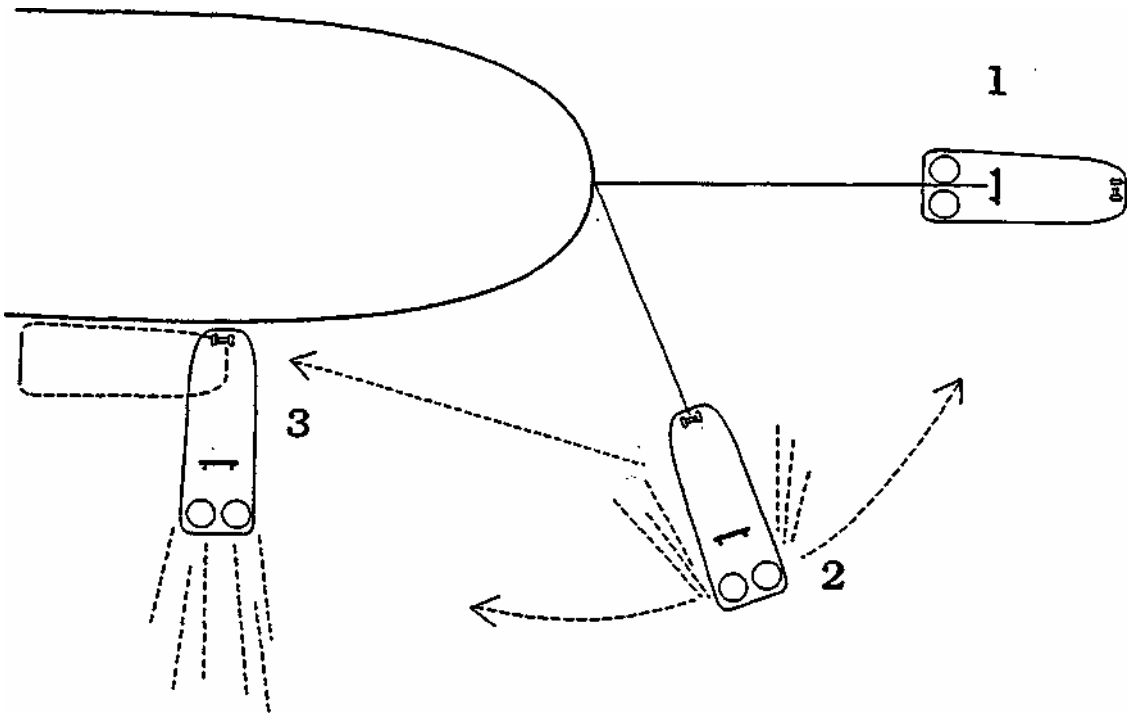

Figure 7-16 Working an ASD tug forward

Position 1 - In this position the tug is, generally speaking, being used in much the same manner as a conventional tug, in that it is using its amidships towing point. Therefore although it may be very powerful and manoeuvrable, it is none the less still at risk from girting and this must, to some extent, limit its operational usefulness to that of the conventional tug.

Position 2 - In comparison to the previous example, this is the more versatile operating method, with the tow connected at its bow and the thrusters ahead of the towing point, in true tractor configuration. The tug is safe in the event of girting and can side thrust effectively around the radius of the tow line.

As previously mentioned, on some older design variants of this type of tug, when making way stern first, at any sort of speed with the power on, there is a tendency of the stern to be pulled down or 'squat' quite alarmingly and badly enough for the after deck to become awash and flooded. This, of course, is not acceptable and the tug master may therefore prefer, quite rightly, to revert to the conventional working method in position 1 for channel escort duties. Newer ASDs may not be susceptible to this problem.

Position 3 - it is characteristic of this type of tug, in some areas of the world, to be designed with a conspicuously well fendered, flat nose, which facilitates either 'lashing up' or simply laying on a ship bow in. This avoids the problem of heeling angle when applying full thrust and places the trusters further away from the ship, thus decreasing power loss through turbulence and backwash.

Some caution is needed, when tugs are approaching a ship to land bows in as the ship's side can be easily damaged through landing too heavily!

Working an Azimuth Stern Drive tug aft

If an ASD tug is attending a ship aft, it can do so in the same manner as a tractor tug, by using its forward towing point and paravane out, using it own weight and water pressure to assist the ship in turning(see Figure 7-16 position 3). It cannot, however, generate the same amount of force (through lift) as the tractor tug does with its large skeg aft.

On the completion of channel escort work, for example, when berthing or swinging, it can rapidly redeploy alongside as shown in position 2 or remain on a long line aft. This is a matter of choice for the individual pilot or ship's master and is dictated by the nature of the manoeuvre they are conducting.

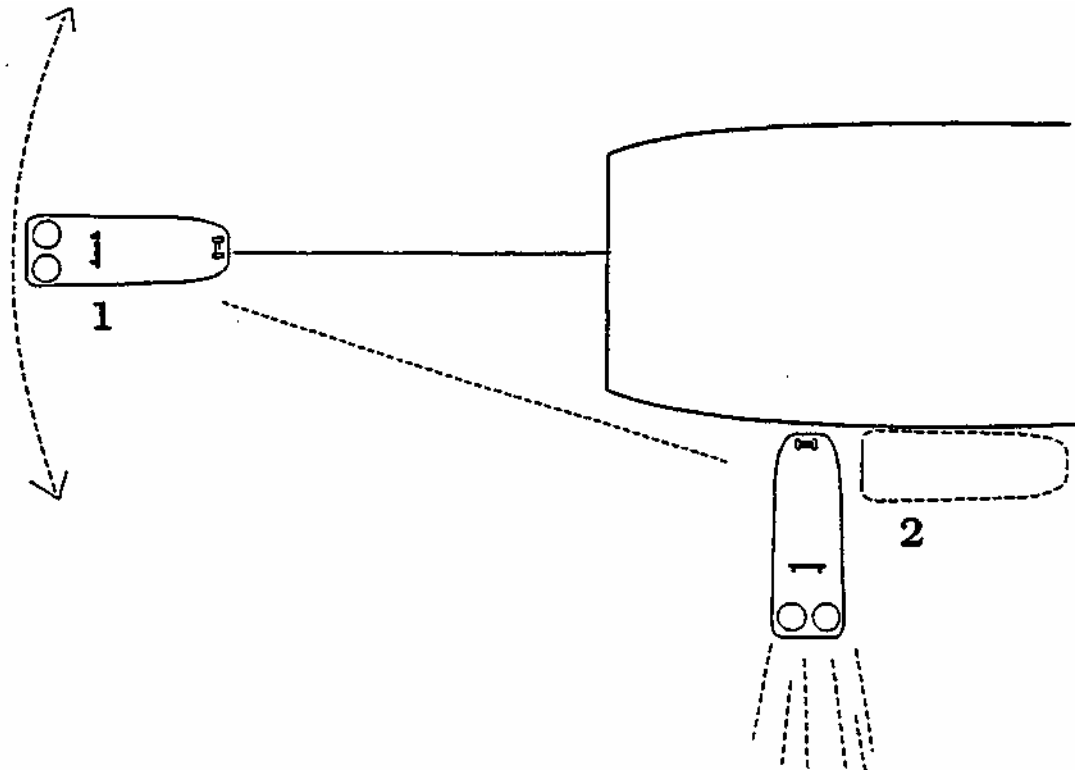

Figure 7-17 Working an ASD tug aft

Positioning a tug.

In order to make the best use of a tug and achieve the desired result, it is important to position it in the right place. To do this it is necessary to ask the following questions .....

* what is the intended movement and/or manoeuvre?
* will the ship be predominately with headway, backing, or stopped?
* where will the ship's pivot point be?
* where will the tug be in relationship to the ship's pivot point?
* what type of tug is being used?

There is, therefore, given the very nature of the questions, every indication that there is a very important interactive link between the ship's pivot point and the position of the tug. This is best illustrated by looking more closely at some specific examples.

Channel escort tug

In very many cases when a ship is in transit of a narrow waterway it is not practicable in the interests of safety to do so without the assistance of a tug. An example of this occurs when a ship has to negotiate a bend in the channel where, due to relative ship size, shallow water, tides, wind or any combination of such restrictions, it is clearly beyond the capabilities of the ship's normal turning circles and a tug is required to improve the ship's turning ability.

Another example occurs, usually in the aftermath of a major accident and serious pollution, where legislation is passed making it mandatory to have a tug escort, even for quite long and relatively open water transits. Although the pilot and ship master may normally be quite capable of doing the job without tugs, like it or not the protection of the environment is the more important issue and the ship cannot be exposed to the threat of mechanical failure, or placed at risk from even the briefest of lapses in human judgement.

It is in the role of channel escort, that the differing operational capabilities of the tractor and conventional tug are most clearly illustrated and one where it is most difficult to break the mould of long established, traditional thinking and working methods.

If only one conventional tug is to be used as an escort, it is not, as discussed earlier in this section, particularly suited to working aft while the ship is making any sort of headway. This means, quite correctly, that it is usually secured forward but even then, if the speed of the ship is too high, it will be somewhat restricted in its arc of operation and effectiveness.

This is further compounded by the position of the ship's pivot point which is, while it is making headway, approximately a 1/4 of the length from forward. As a result of this the tug is working on a relatively poor turning lever. This can be illustrated, for example, with a 160 metre ship which has engaged a 20 tonne tug forward (see figure 7-18). This will give an approximate turning moment of .....

40 metres x 20 tonnes = 800 tm

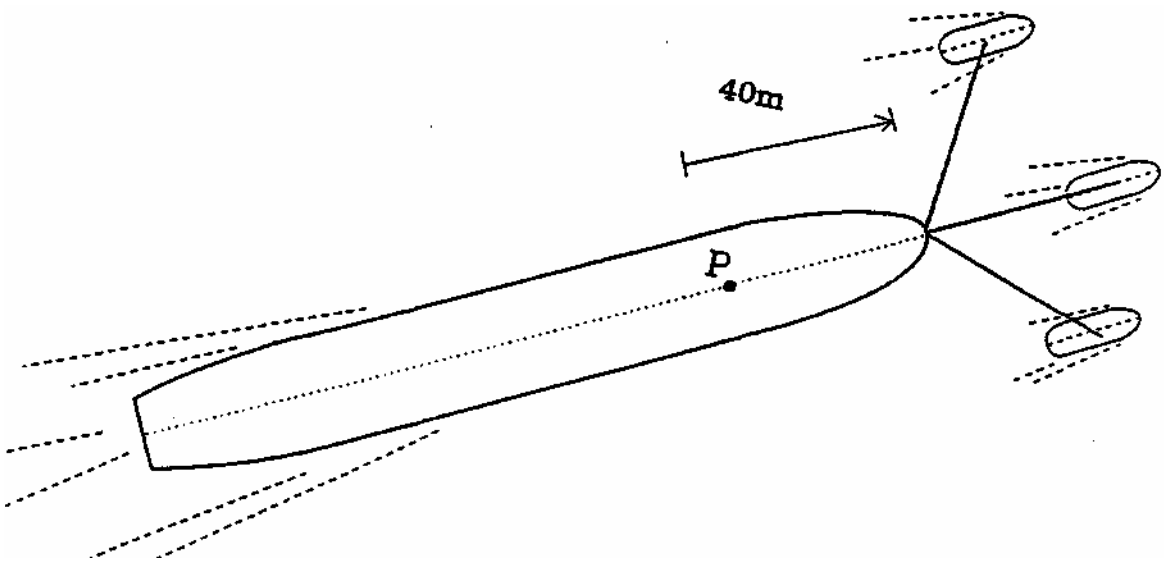

Figure 7-18 Channel escort - conventional tug forward

By comparison, if a tractor tug is engaged to escort the ship (or an ASD tug) it would, as previously illustrated, be able to work aft with considerable flexibility, due to its high manoeuvrability. Its efficiency would be even further enhanced because, unlike the example with the tug forward, it will be working on a very good turning lever of 3/4L of the ship (see figure 7-19).

Assuming for the sake of comparison that the tug is still of 20 tonnes bollard pull, this will give a turning moment of....

120 metres x 20 tonnes = 2400 tm

This is three times that of the forward turning moment and also illustrates why the effect of 'paravaning' is achieved with relatively little effort.

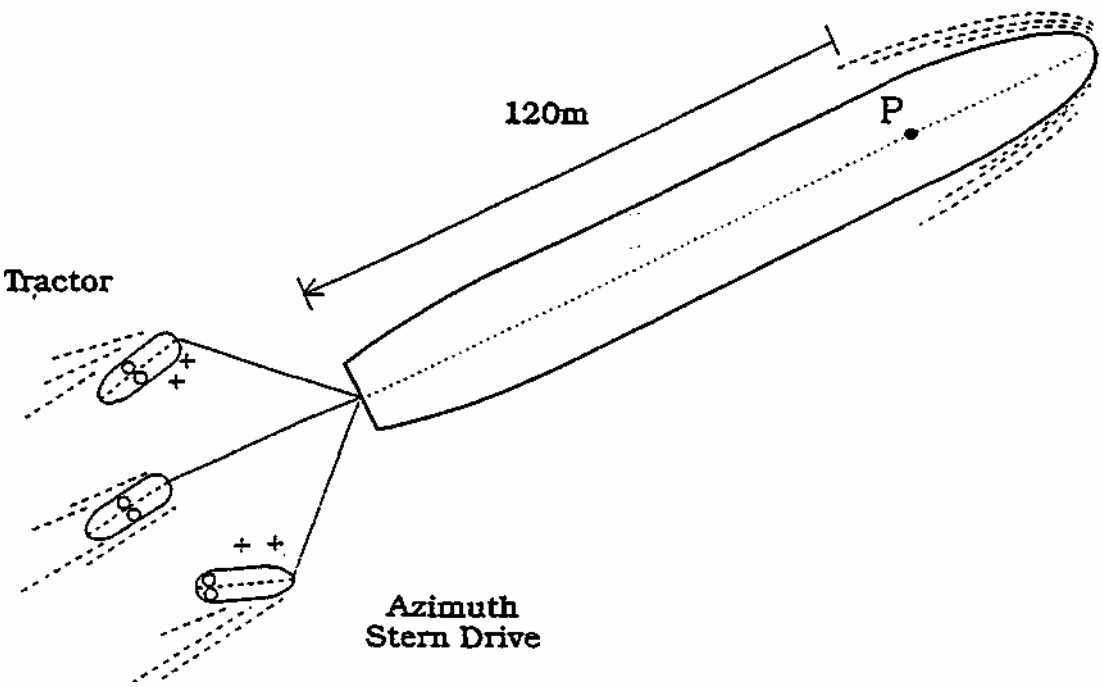

Figure 7-19 Channel escort - tractor tug aft

It is also very important of appreciate that with a tractor tug secured aft, if the ship experiences difficulties, or an emergency, which require it to slow down quickly, the tug can also dig in and act as a very effective brake, whilst still assisting to control heading.

This example clearly indicates that the position of a tug relative to the ship's pivot point strongly influences the tug's effectiveness. It is also apparent that any shift of the pivot point will also effect tug performance and this may best be illustrated with an example of tugs on long lines.

Tugs on long lines

In this example the ship is of 160 metres length with two 20 tonnes bollard pull tugs in attendance, one forward and one aft, both on long lines. It is assumed for the example that the ship is on even keel, in deep water, with no wind or tide and is therefore influenced by no other obvious factors or forces.

Ship stopped

With the ship stopped and on even keel the centre of gravity of the ship, and pivot point, is approximately amidships. If both tugs now take the weight with full power, they will be both be operating on similar turning levers of 80m and the turning moments will be:-

Forward Tug 80m x 20t = 1600 tm
Aft Tug 80m x 20t = 1600 tm

As a result the ship will lift off, moving bodily sideways with no residual rate of turn. (Figure 7-20 a)

Ship making headway

Once the ship gathers headway, even a small amount, the pivot point will move forward to a position approximately one quarter of the ship's length from the bow This substantially alters the lengths of the respective turning levers and upsets the balance between the two tugs whose turning moments will now be:-

Forward Tug 40m x 20t = 800 tm
Aft Tug 120m x 20t = 2400 tm

The tug aft is therefore considerably more efficient than the tug forward and will lift the ship's stern out much more quickly than the bow, which will appear sluggish. Alternatively this may be perceived as the ship's bow developing an undesirable swing to port. (Figure 7-20 b)

Ship making sternway

If the ship, which was previously making headway, is now allowed to develop sternway, either intentionally or otherwise, the balance of the two tugs is completely changed. This is due to the shift of the ship's pivot point, from forward to a position approximately one quarter of the vessel's length from the stern. The respective turning levers and turning moments are now completely altered and are as follows .....

Forward Tug 120m x 20t = 2400 tm
Aft Tug 40m x 20t = 800 tm

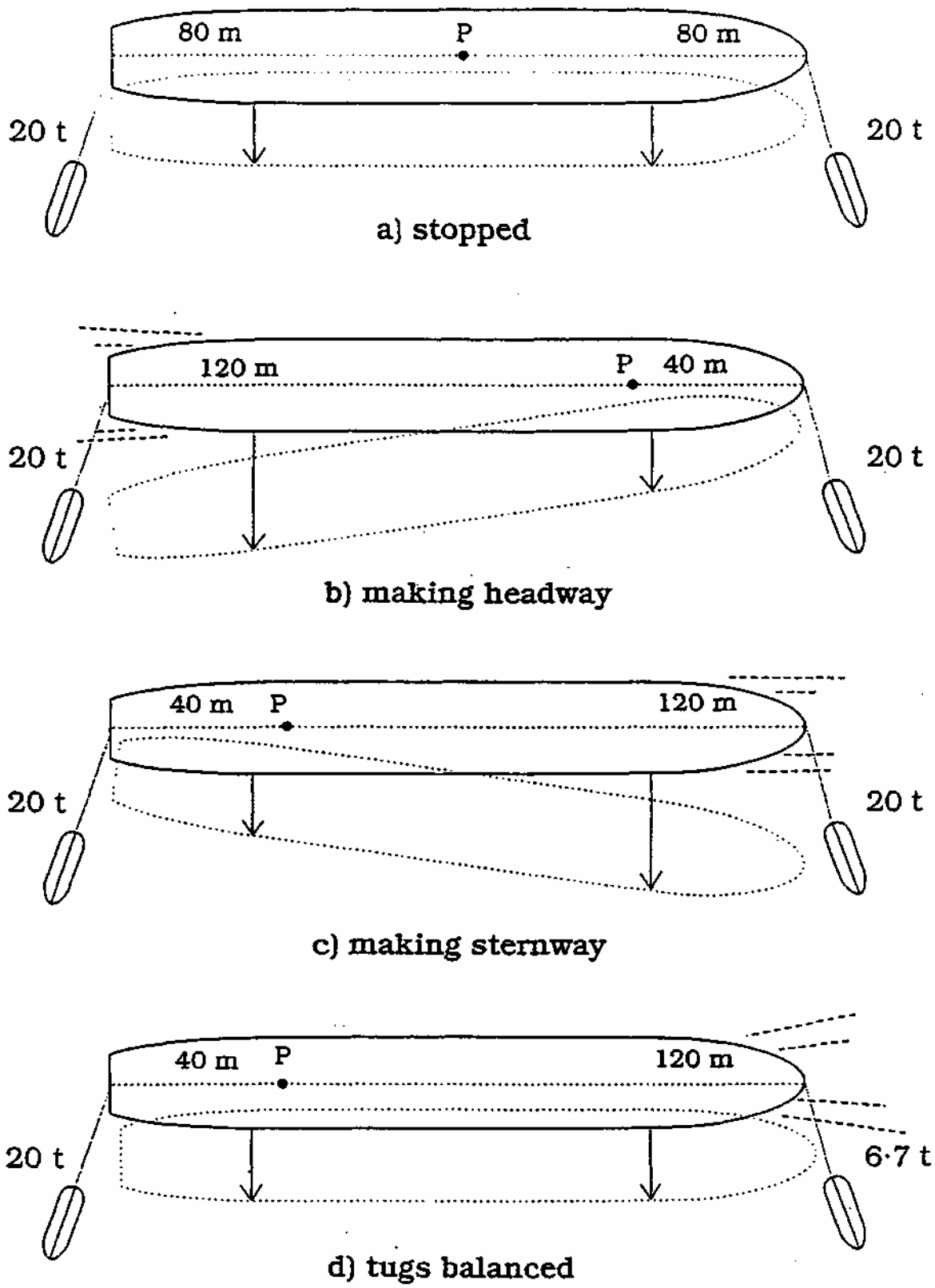

Figure 7-20 Tugs on long lines

The tug aft, which was previously doing well, is now poor in comparison to the forward tug and the stern of the ship will appear to be sluggish when lifting off. This may also be perceived as a developing swing of the bow to starboard and opposite to the swing to port, which was experienced when the ship was making headway. (Figure 7-20 c)

Balancing the Tugs

In the preceding examples with two 20 tonnes bollard pull tugs the maximum lift for the ship was:-

Forward tug	20t
Aft tug	20t
Total	40t

Unfortunately, if the ship is developing an undesirable swing due to headway or sternway and the tugs are at full power, it will be necessary to instruct the appropriate tug to ease back in order to balance the tugs and correct the swing. In this particular example, with the ship making sternway, the forward tug would have to ease back to approximately one third of its potential.

Aft tug	40m x 20t = 800 tm
Forward tug	120m x 7t = 800 tm
Totals	27t = Nil tm

Having ordered two tugs that appear to be quite adequate, it is very important to appreciate that there will be occasions when they will be forced to work considerably short of their full potential, particularly when compensating for an undesirable turning moment, in a situation that has previously been demanding full power. (Figure 7-20 d)

Tugs alongside

As previously mentioned in this section, some countries and some tugs notably tractor/ASD tugs, may favour working alongside . Elsewhere it is not uncommon to employ tugs alongside, particularly when several tugs are involved in large ship movements, either to assist a ship in breasting up to a berth, or lifting off. Those countries that predominately employ tractor/ASD tugs alongside often do so most effectively. To understand this it is necessary to be aware of the interaction that exists between the tug's position alongside a ship and the position of that ship's pivot point.

Ship Making Headway

When the ship is making headway, even a small amount, there is a very important difference between using a tug alongside forward, as opposed to somewhere aft. As illustrated with the ship on the left in figure 7-21 the forward tug is likely to be working very close to the ships pivot point. In this position it is working on a turning lever that is either very small, or negligible and as a consequence will be relatively poor at assisting the ship to develop rate of turn or swing. However, by working close to the ship's pivot point it will be most effective in assisting the ship to develop bodily 'lateral movement', particularly when used in conjunction with full rudder and short kicks ahead by the ship.

This would, for example, be most useful when approaching a berth and it becomes necessary to press the ship in towards it, or also when lifting off during departure. With the tug being used extensively in this position, there is a considerable similarity to driving a ship with a bow thruster, but with the added advantage of much greater power over a 360° arc of operation. This also enables the pilot to use the tug for braking, or stopping the ship, with good control, if so required.

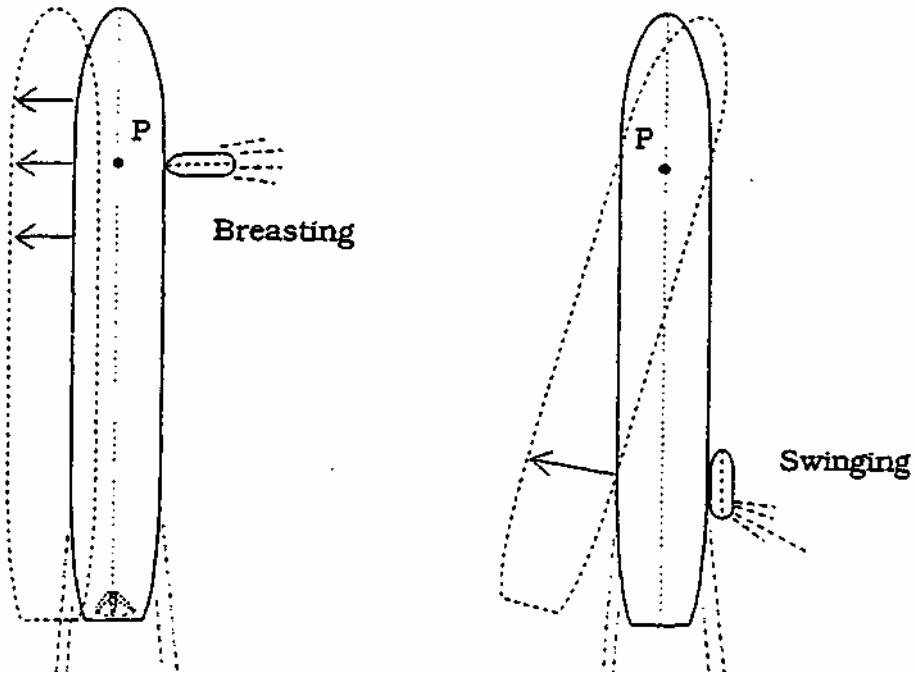

Figure 7-21 Tugs alongside - making headway

If the tug is used aft, as depicted with the ship on the right in figure 7-21, its role is very much altered. Wherever it is placed it is likely to be some distance from the ship's pivot point, working on a substantial turning lever and as such will always be best placed to help increase or decrease the ship's rate of turn, whilst making headway.

Under certain circumstances, however, this is not as successful as one would expect and may be due to the close proximity of the tug to the ship's side which creates too much backwash and turbulence for the tug to be effective, noticeably when the tug is thrusting hard away from the ship. In one port, for example, this tug is left off until a specific bend in the channel has been negotiated, before being secured for the berthing operation, which involves backing up to a berth.

Ship making sternway

If, after having been making headway, the ship now begins to make sternway, or if the ship will be predominately making sternway, for example when backing up to a berth, it should be appreciated that the role of the two tugs previously illustrated will be reversed.

The ship's pivot point will have moved, to a position approximately a quarter of the length of the ship from the stern and as shown with the ship on the left in figure 7-22, the tug aft will now be actively engaged quite close to this point. In this position it is not therefore best placed to assist the ship in turning, but will be very useful in assisting the ship to develop bodily lateral motion especially when breasting in towards the berth stern first. Although perhaps, less efficient, due to its own backwash and turbulence, the tug aft will also be useful in lifting the ship 'bodily* off, typically during a stern first departure. It should still however, be borne in mind that a tug in this position is not naturally inclined towards assisting a swing, or developing a rate of turn and the outcome may therefore be quite disappointing.

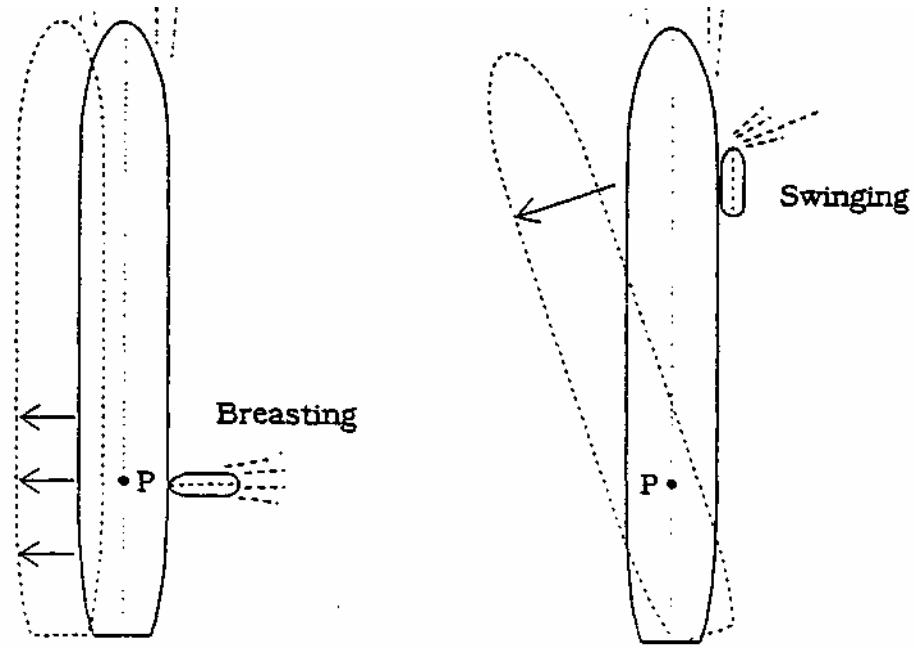

Figure 7-22 Tugs alongside - making sternway

Given just one tug working alongside and the need to control heading whilst making sternway, it is best placed as shown with the ship on the right in figure 7-22, as far forward as practicable. In this position it is some distance from the ship's pivot point, working on a substantial turning lever and therefore able to produce a powerful turning moment when required.

It may have been noted, that in some cases there exists an important correlation or similarity between tugs working alongside and a ship being worked with an operational bow thruster. This is indeed so and in many instances, if the ship is fitted with a 'good' bow thruster, it can effectively replace a tug, which might normally work alongside forward.

If, on the other hand, the ship does not have a bow thruster and only one tug is available, this may perhaps be best positioned well forward in roughly the same location as a bow thruster and used accordingly.

Bollard Pull v Wind Force

It is important for a pilot to have a broad idea as to what wind force in tonnes is being exerted upon the ship, in comparison to the total bollard pull which is available from the local tugs. This can help, for example, in establishing the wind limits for certain vessels, or assist in analysing movements which may not be going well.

With an approximate knowledge of the ship's length overall and freeboard, plus the length and height of the superstructure, including any deck cargo such as containers, it is possible to calculate roughly how many square metres of area the ship is presenting to a beam wind.

The container ship in figure 7-23, for example, has the following approximate overall dimensions and area of windage .....

Length	280m	
Freeboard	25m	
Total Area	= (280x25) =	7000 sq metres

If we know the predicted wind speed for the intended movement it is now possible to establish a rough idea as to the force in tonnes that the ship is likely to experience.

Example

Wind speed = 30 knots

Wind speed in metres per second (V)

$$\frac{\text{knots}}{2} = \frac{30}{2} = 15 \text{ m/s}$$

Wind force in Tonnes per 1000 sq. m

$$\frac{V^2}{18} = \frac{15^2}{18} = \frac{225}{18} = 12.5 \text{ t/sq.m}$$

Total Wind Force 12.5 x 7 = 88 tonnes

(For further and more detailed reading concerning the influence of wind upon a ship please refer to Chapter 4 - Effect of Wind).

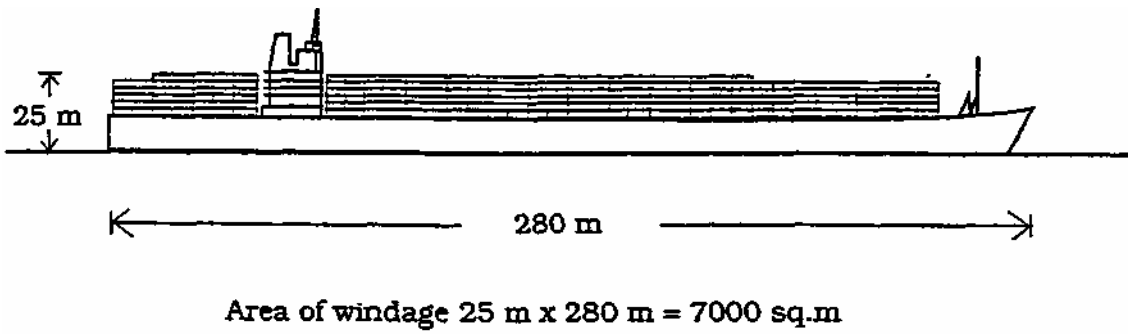

Figure 7-23 Container ship - windage

To hold this ship steady with *a* beam wind of 30 knots would require, at the very least, a combination of tugs that offer a total bollard pull of at least 88 tonnes.

However, it must also be remembered that the wind force varies as the square of the wind speed, and a gusty wind, or squall, may take the wind force well beyond that of the tugs, thereby placing considerable strain on the tug's wires.

This particular ship would, for example, experience the following increases in wind force if the wind gusts to:-

*	35 knots	119 tonnes
*	40 knots	156 tonnes

With an approximate knowledge of the wind force and knowing the type and size of tugs to be used, it is now possible to take a closer look at a movement involving several tugs.

Multi-Tug Movement

In this particular example, see figure 7-24, the container ship whose windage we have already established, will be inbound and intending to swing off the terminal, prior to going astern up to the berth. During the manoeuvre it is anticipated that a wind of 30 knots will be blowing off the berth and also be on the ship's port beam whilst it is going astern.

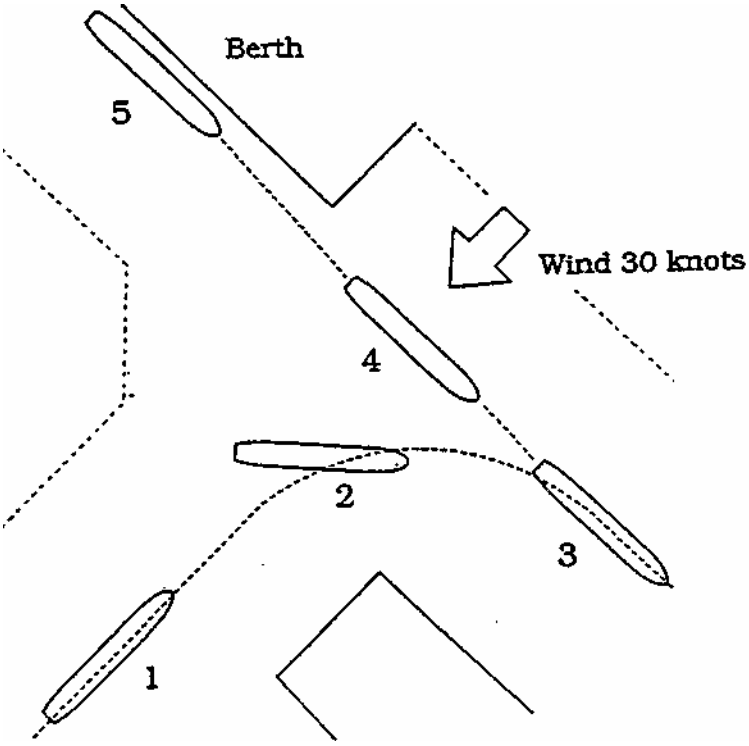

Figure 7-24 Container ship - manoeuvre

Available to assist the manoeuvre are the following:-

Tug 1 Forward	40t
Tug 2 Alongside	30t
Tug 3 Alongside	40t
Tug 4 Aft	30t
Bow thruster	10t

We can now look at this movement more closely, to obtain a broad idea as to whether it can be conducted safely in these particular conditions with the tugs provided. This could for example, be very useful when discussing the movement with other interested parties such as the port authorities and may offer a more professional and substantial argument, for or against a movement, than might otherwise have been the case.

Movement 1 Discussion

Ship Stopped

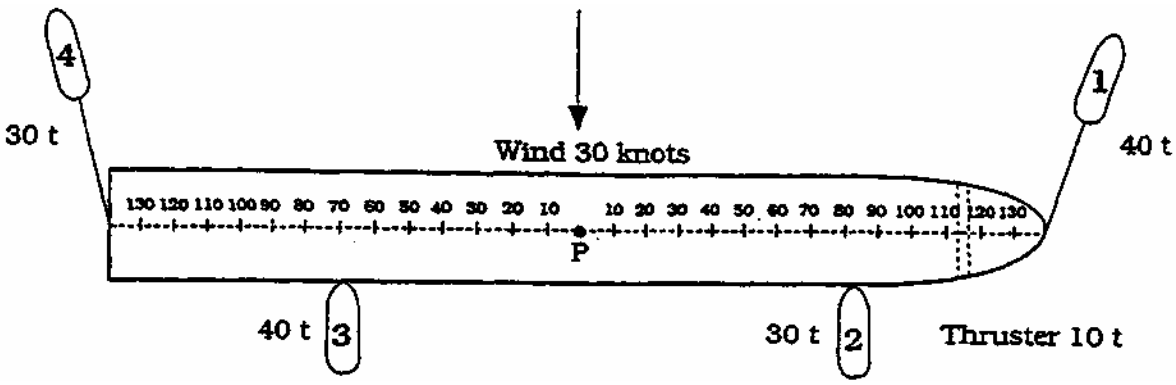

	Force in Tonnes		Levers in Metres		Turning Moments	
	Port	Starboard	Forward	Aft	Port	Starboard
Wind	0	88	0	0	0	0
Tug 1	40	0	140	0	5600	0
Thruster	10	0	115	0	1150	0
Tug 2	30	0	85	0	2550	0
Tug3	40	0	0	70	0	2800
Tug 4	30	0	0	140	0	4200
Totals	150	88			9300	7000

Figure 7-25 - Movement 1 - Ship stopped

In the interest of simplicity, the wind in this case is shown working on the pivot point and exactly amidships thus indicating no rate of turn. It should be pointed out that in some instances, with varying ship design, it may be a little forward or aft of this position.

Tugs 1,2 and thruster combine on their turning levers of 140, 1 1 5 and 85 metres respectively, forward of the pivot point, giving a total turning moment of 9,300 tonnes/metres to port.

Tugs 3 and 4 are working on turning levers of 70 and 140 metres respectively, aft of the pivot point to give a turning lever of 7,000 tonnes/metres to starboard.

This leaves the ship with a residual and perhaps unwanted, turning moment of 2,300 tonnes/metres to port with the tugs at full power.

To reduce this swing either tug 1, tug 2 or the thruster and maybe a combination of all three, will have to be backed off. To achieve this with tug 1, for example, it would have to pull back by nearly 25 tonnes bollard pull.

To keep the ship straight, without an undesirable swing, it will be necessary to reduce the combined potential bollard pull of 150t to 125t. Fortunately this should still cope reasonably well with the 88 tonnes of wind force without compromising the manoeuvre.

Ship making sternway

Once the ship begins to back up, the pivot point moves aft and affects the balance of the tugs quite seriously.

With the pivot point now further aft the wind force of 88 tonnes is now able to get to work on a 70 metre lever, producing a 6,160 tonnes/metres turning moment to starboard.

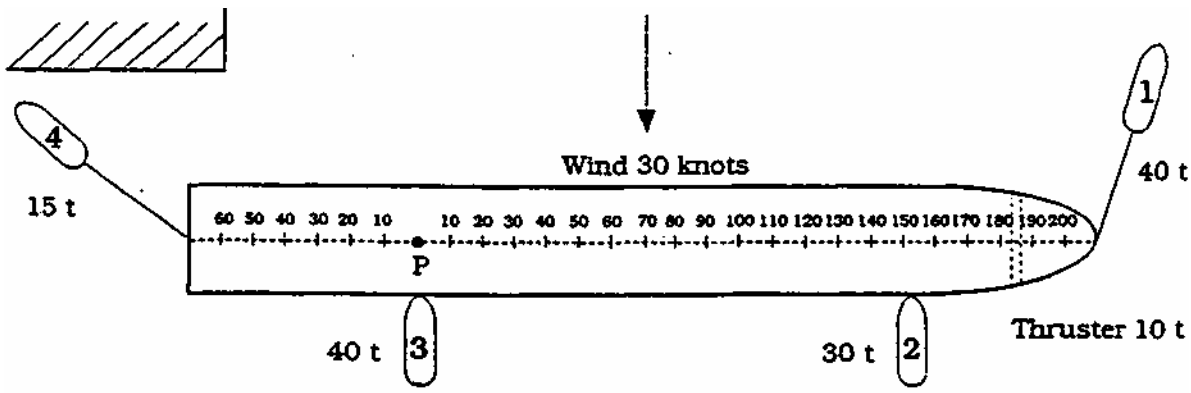

	Force in Tonnes		Levers in Metres		Turning Moments	
	Port	Starboard	Forward	Aft	Port	Starboard
Wind	0	88	70	0	0	6160
Tug 1	40	0	210	0	8400	0
Thruster	10	0	185	0	1850	0
Tug 2	30	0	155	0	4650	0
Tug 3	40	0	0	0	0	0
Tug 4	15	0	0	70	0	1050
Totals	135	88			14900	7210

Figure 7-26 Movement 1 - ship making sternway

Tugs 1 and 2 and the thruster are now working on excellent turning levers of 210, 185 and 155 metres respectively, thus giving a combined and very large turning moment of 14,900 tonnes/metres to port.

Tug 3 is now positioned either on, or at least close to, the pivot point and is therefore able to exert full power without incurring any turning moment.

The aft tug 4 is now shown with an arbitrary reduction in bollard pull to 15 tonnes, as it approaches the restrictive close proximity of the dock side. This coupled with a turning lever that is now reduced to 70 metres, results in a poor turning moment of 1,050 tonnes/metres to starboard which is very poor.

The residual of these various turning moments is a very substantial 7,690 tonnes/metres resulting in the stern swinging to starboard, down wind and away from the berth.

To stop this swing either tug 1, tug 2, the thruster, or a combination of ail three, will need to be backed off. Tug 1, for example, could be stopped altogether which would result in a loss of 40 tonnes of bollard pull. This brings the combined potential bollard pull, with all the tugs 'digging in' full down to 1 1 0 tonnes, thus leaving an almost certainly unacceptable margin of safety against the 88t of wind force.

This clearly highlights the dilemma of some tug operations, wherein the total bollard pull appears substantial in the first instance, but is seriously reduced by the need to control an unexpected rate of turn, simply as a result of commencing to make sternway, or indeed headway. This can also place a tug under sudden and unexpected loads, which can easily part a tow line. It is perhaps worth looking to see if the tugs can be re-positioned to better effect.

Movement 2 - Discussion

The crucial thing in this operation is to get more power aft of the pivot point, in order to counterbalance the excessive swing of the stern away from its desired track when backing, but without compromising the availability of full power should it be required. Some small changes in tug positioning could perhaps help.

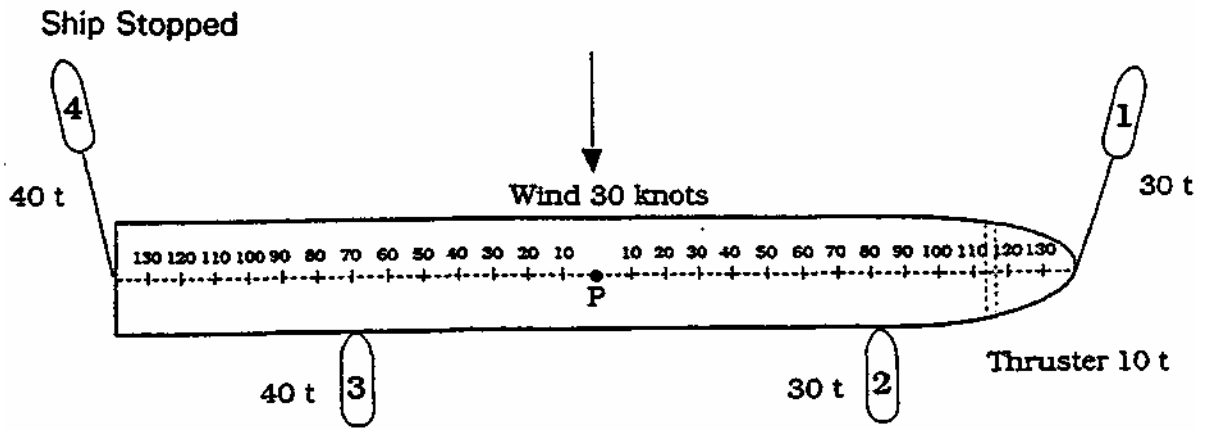

	Force in Tonnes		Levers in Metres		Turning Moments	
	Port	Starboard	Forward	Aft .	Port	Starboard
Wind	0	88	0	0	0	0
Tug l	30	0	140	0	4200	0
Thruster	10	0	115	0	1150	0
Tug 2	30	0	85	0	2250	0
Tug 3	40	0	0	70	0	2800
Tug 4	40	0	0	140	0	5600
Totals	150	88			7900	8400

Figure 7-27 Movement 2 - Ship stopped

Because the after tug is working at such a disadvantage on a poor turning lever, we can help by exchanging it with the more powerful 40t forward tug. If this were a tractor tug there might also be less loss of power, when hampered by the closeness of the berth and it may also be quite useful aft, during the channel approach phase.

This has reduced much of the previous imbalance and the residual turning moment of 500 tonnes/metres to starboard, is tolerable and easily adjusted.

Making Sternway

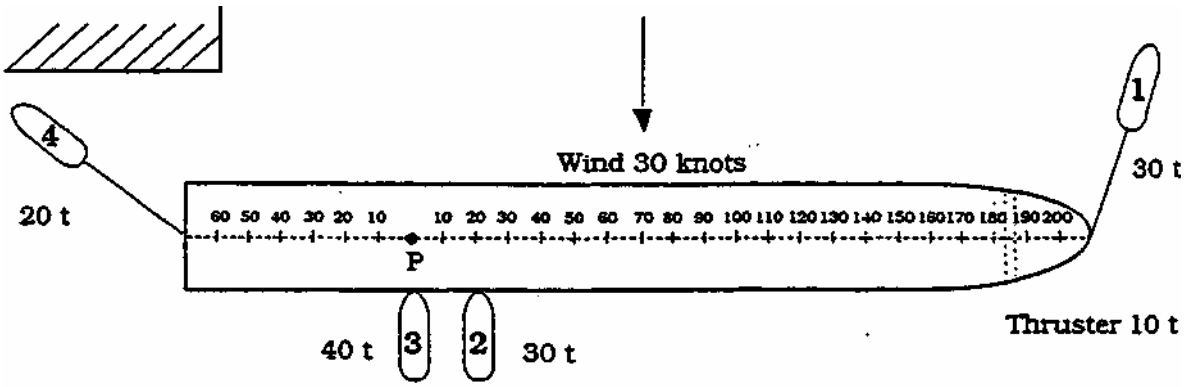

	Force in Tonnes		Levers in Metres		Turning Moments	
	Port	Starboard	Forward	Aft	Port	Starboard
Wind	0	88	70	0	0	6160
Tug 1	30	0	210	0	6300	0
Thruster	10	0	185	0	1850	0
Tug 2	30	0	20	0	600	0
Tug 3	40	0	0	0	0	0
Tug 4	20	0	0	70	0	1400
Totals	130	88			8750	8160

Figure 7-28 Movement 2 - ship making sternway

By the time the ship commences to make sternway, tug 2 might be repositioned aft, as close to the pivot point as practicable and adjacent to tug 3, where they can both work on full power, without creating excessive turning moments. Given its ability to reposition quickly when so required, this task might best be given to a tractor tug.

In the interest of a safety margin tug 4 is still assumed to experience a loss of effectiveness to 20t as it closes the berth.

The turning moments are now very well balanced with a small insignificant residual turning moment of 590 tonnes/metres to port.

All four tugs can 'dig in' with full power and press the ship up without inducing excessive swing.

This particular movement has been picked at random, to illustrate how an approximate, but useful, assessment can be made of any manoeuvre involving the positioning of tugs, and then be rethought or adjusted to improve the overall situation. It is also possible that such an analysis, no matter how simple, may indicate in advance that a particular manoeuvre is unlikely to work!. The importance of this exercise also demonstrates the need for planning and prior information of available tugs.

Conclusion

As with all ship handling, the arguments and suggestions in this example are by no means exhaustive or conclusive and may well generate and encourage further ideas for discussion.

It is perhaps worth remembering a few words from the beginning of this chapter

"Given such a wide sphere of operations across the world, it is obviously difficult to develop general instructional material for tug operations. Not surprisingly, in some cases, it may come into conflict with more specific individual working methods. These naturally take priority and this is fully appreciated and understood".

With this in mind it is hoped that the overall objective of this chapter "to offer a broad overview of the use of tugs in ship handling", will be especially useful to those new to tug operations. It will also be useful to the more experienced ship handler when, occasionally for a variety of reasons professionally, it becomes necessary to analyse a movement in more depth.

CHAPTER EIGHT

THE USE OF BOW THRUSTERS

Introduction

It is not uncommon for the masters and officers of ferries, cruise ships, supply boats and other similar vessels to spend a high proportion of their operational service in a busy manoeuvring environment. Where, in a relatively short period of time, they can gain a considerable amount of ship handling experience on ships which are usually fitted with twin propellers and bow thruster(s) and therefore considered fairly 'handy'. This area of bow thruster work is not the concern of this section.

The single screw ship, such as a container ship, car carrier, tanker or bulk carrier, no matter what its size, does however represent an altogether different case. These vessels are usually engaged on long haul trades which afford infrequent opportunities to gain a great deal of experience in 'hands on' ship handling and although some ships are fitted with bow thrusters, to improve their handling characteristics, they are none the less single screw vessels which can still be comparatively difficult to handle and relatively unforgiving.

The objective of this chapter is, therefore, to discuss some of the more important points that should be kept in mind when using a bow thruster to assist in the handling of a single screw ship.

Reliability

In the past, and to some extent to this day, pilots are often, quite correctly, distrustful of bow thrusters. This is in part due to their poor track record for reliability. There is no doubt that older units with outdated electrics or hydraulics are prone to problems, situated as they are somewhat remotely, deep down in the fore part of the ship and subjected to the pounding of heavy weather, vibration and damp, in a truly hostile environment, compounded by lack of use and neglect on long sea passages.

Fortunately the demand for reliable bow thrusters in super ferries, exploration work and other specialised fields, coupled with modern technology, has led to the development of altogether more robust and reliable units. These can be used in all manners of vessels from large tankers to tugs, although of course a pilot must still keep a wary eye open for poor maintenance and neglect.

More importantly, and again with some justification many pilots may still appear to be quite sceptical concerning bow thrusters mainly because they are all too often underpowered and therefore perceived as inadequate.

Power

There are a variety of bow thruster units in use today, which range from the unusual, a V10 diesel engine on the forecastle with an amazing 30m drive shaft on a VLCC, to the more common, a reversible electric motor in principle not unlike a cargo winch, driving a fixed pitch propeller, or an electric motor with a hydraulically operated variable pitch propeller.

On many vessels the design parameters are severely limited by the need to place the drive units in a restrictive location, low down in the narrow fore part of the ship. Even if more space is available on a larger ship, the size of the tunnel and therefore propeller is still restricted by practical considerations such as the ballast draft, integral hull strength and realistic maintenance levels.

This limitation of power due to the imposition of tunnel size is particularly evident on large super ferries where, despite increasingly large tonnages, it is still necessary, due to operational restrictions, to retain a relatively shallow draft. In these circumstances it is common to see such vessels fitted with twin bow thrusters in order to improve power output. Similarly, in other trades, there are one or two single screw ships that enjoy the benefits of improved bow thruster design. Unfortunately this is not generally the case and on many vessels power output may be disappointing.

The rating, or power of a bow thruster is often given in kilowatts (kW). This may be confusing to the inexperienced and it makes it difficult to compare thruster power to another force such as a tug or the wind. To improve this situation an approximate conversion can be made to either shaft horse power (shp) or tonnes (t) force given that....

0.74 kW	=	1 shp
100 shp	=	1 t

A common range of thrusters would therefore give the following:-

500 kW	676 shp	6t
750 kW	1014 shp	10t
1000 kW	1351 shp	13t
1250 kW	1689 shp	17t
1500 kW	2027 shp	20t
1750 kW	2364 shp	24t
2000 kW	2702 shp	27t

Looking at this list it should be remembered that thrusters, rather like tugs, may sometimes have a slightly better conversion from kilowatts to shaft horse power. This may be due to design improvements in propeller characteristics, the fairing

and ducting of tunnel apertures or anything else that will improve the rate of water flow through the tunnel without increasing motor size.
It is now possible to compare thruster force to wind force, using a car carrier of 198m and container ship of 210m as examples. The wind force on the beam for each ship is illustrated by a simple graph in figure 8-1 and shows a quadratic curve indicating a rapid increase in tonnes force for relatively small increases in wind strengths, most noticeably with the higher wind strengths. In order to compare this with a broad range of thruster power two bow thrusters of 1,000 kW and 2,000 kW are shown with straight dotted lines across the graph at 13 and 27 tonnes respectively.

In the case of the container ship the wind force exceeds thruster force at .....

	1000 kW	11 kts (Force 3/4)
*	2000 kW	16kts (Force 4/5)

and on the car carrier it is at:-

1000kW	13kts (Force 4)
2000 kW	18kts (Force 5)

This, it should be noted, is the maximum wind strength, so should it become either necessary or prudent to make an allowance for gusty conditions, the result will be a relatively poor range indeed. Thus the weather window will need to be watched most carefully to avoid being caught with insufficient resources.

These examples are only shown in order to give some general indication as to the possible limitations that might be encountered. Individual experience of specific ships may naturally be much better or indeed far worse.

Whilst it would appear that little imagination or thought is required to thrust the bow hither and thither, as seemingly required, there are one or two specific aspects of bow thruster work which are worth looking into more closely. These are .....

* thrusting when stopped.

* the thruster and headway.

* creating lateral motion.

* working the thruster with sternway.

This may help to encourage more confidence in those not familiar with bow thruster work.

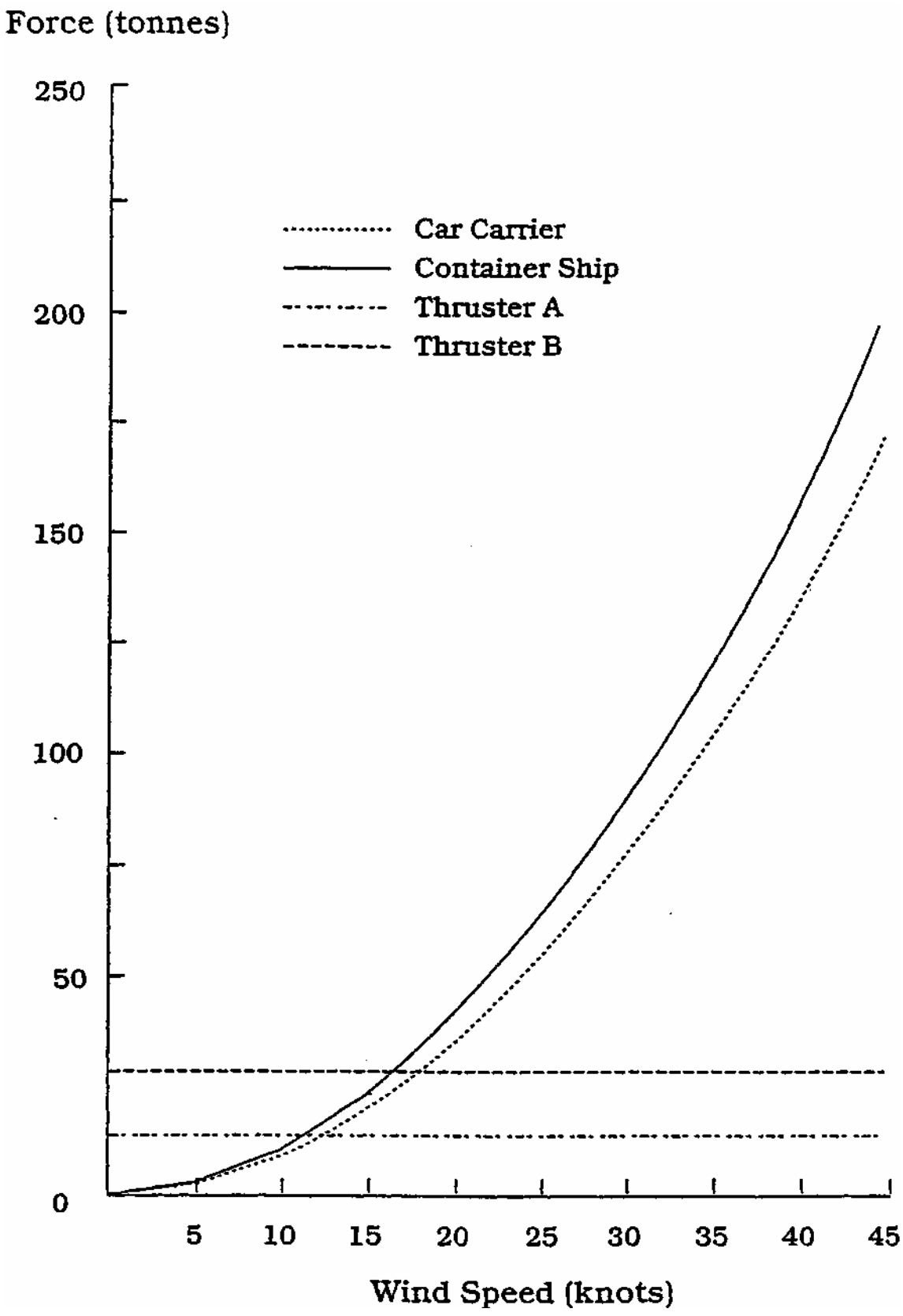

Figure 8-1 Graph of wind speed and thruster force

Thrusting when stopped

The simple process of thrusting the bow to port or starboard, whilst the ship is stopped, may not initially appear to warrant much concern. Once, however, the ship is being worked close to a jetty, other vessels or any obstruction, where movement and positioning need to be carefully monitored, there are two aspects which may occasionally be of some significance .....

* position of pivot point.
* unexpected movement ahead.

When a ship is stopped and the bow thruster is activated, to thrust the bow in the desired direction, it is working on a pivot point which is located well aft and (due to the underwater profile of the ship) in a position which is roughly the equivalent of one ship's beam from the stern (see figure 8-2). If the thruster is of a modest 10 tonnes bollard pull this will give it a turning moment of .....

10t x 145m = 1450tm

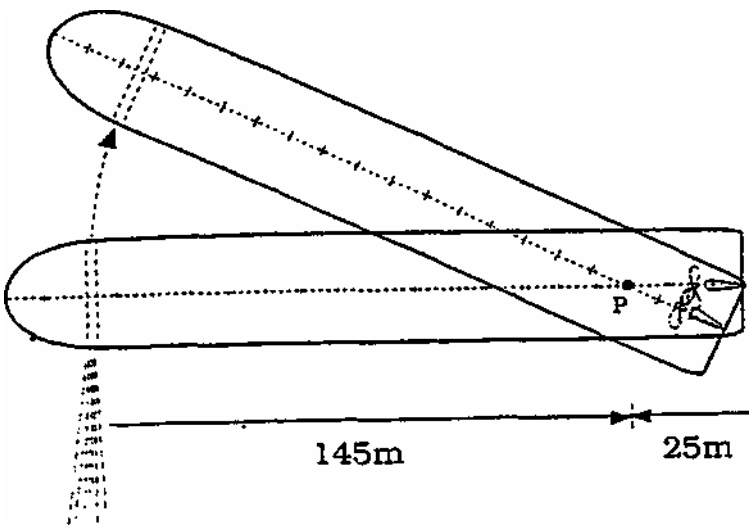

Figure 8-2 Thrusting when stopped - Pivot point

This is probably the best turning moment that can be achieved because any subsequent headway, or sternway, will move the pivot point adversely and shorten the turning lever accordingly. This will be illustrated in this chapter.

It is not uncommon for some officers to have noticed that a ship appears to develop a small amount of headway, seemingly as a result of using its bow thruster. This is most noticeable when the ship was previously stopped in the water. This phenomenon may partially be initiated by a build up of positive water pressure along the ship's side, as it is thrust sideways by the thruster (see figure 8-3). This in turn creates a flow of water around the bow which may be of sufficient velocity to create a low pressure area immediately ahead of the ship. In addition to this, it is thought likely that the bow thruster draws in water more easily from the bow area, rather than from aft of the tunnel and this will also encourage the development of a low pressure around the bow. In a similar manner to interaction and bank effect the ship will tend to 'sniff' or 'smell' this area and creep ahead; particularly if the bow thruster is operated, perhaps a little too often or a little too vigorously.

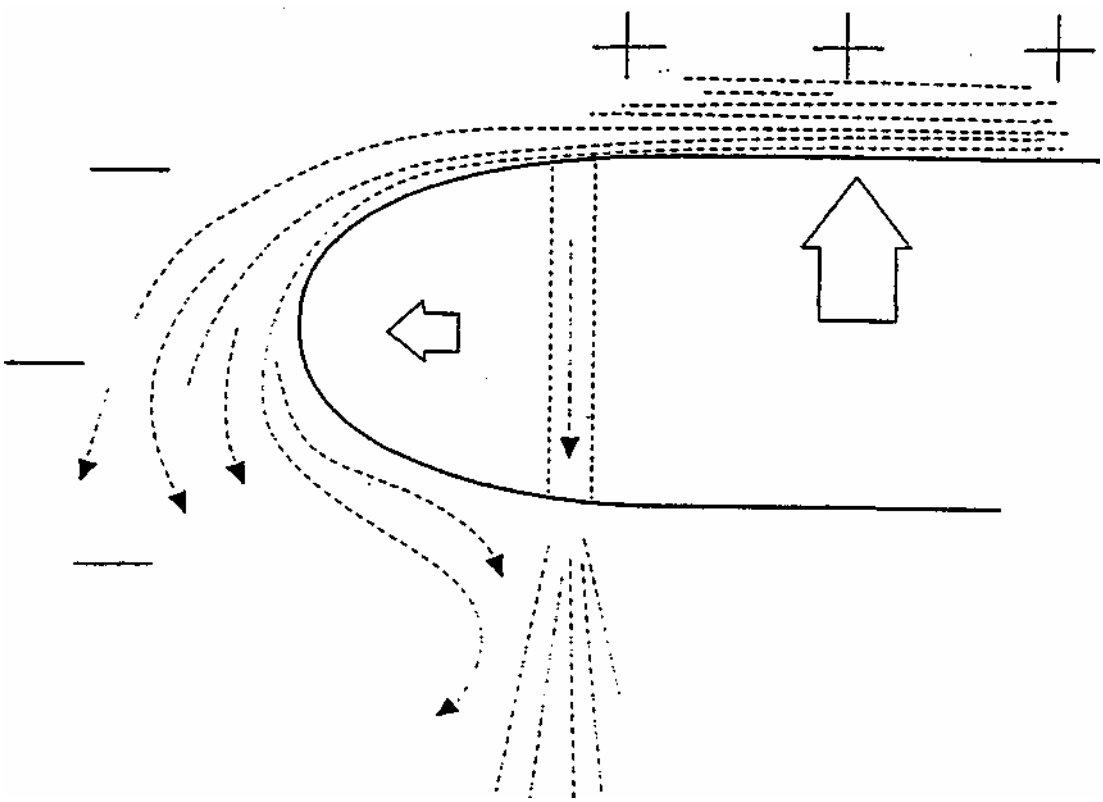

Figure 8-3 Thrusting when stopped - creeping ahead

Thrusting with Headway

When using a bow thruster while a ship is making headway, the first limitation is that which is imposed by too high a speed. With the exception of a few powerful units and multi-thruster units, performance will fall off quite rapidly once the ship's speed has risen above 2 knots or thereabouts. At higher speeds turbulence will develop at the tunnel entrances, spreading through the tunnel to seriously impair propeller performance. Externally, the increasing water flow across the tunnel mouth soon deflects the meagre thruster output. In an attempt towards improving this, some manufacturers have altered the shape of the tunnel apertures, thus improving water flow through the tunnel, but despite this, excessive speed will probably still be detrimental to thruster efficiency.

Less obvious, but much more important, is the position of the ship's pivot point which, when a vessel is making headway but not turning, is approximately 1/4 of the ship's length from the bow (see figure 8-4). This has the effect of placing the thruster on a very short turning lever, in this case 25m, and the resultant turning moment is poor:-

* 10t x 25m = 250tm

This illustrates the main reason for a reduction in the thruster's turning ability as the ship gathers headway, in comparison with the previous example, when the ship was stopped.

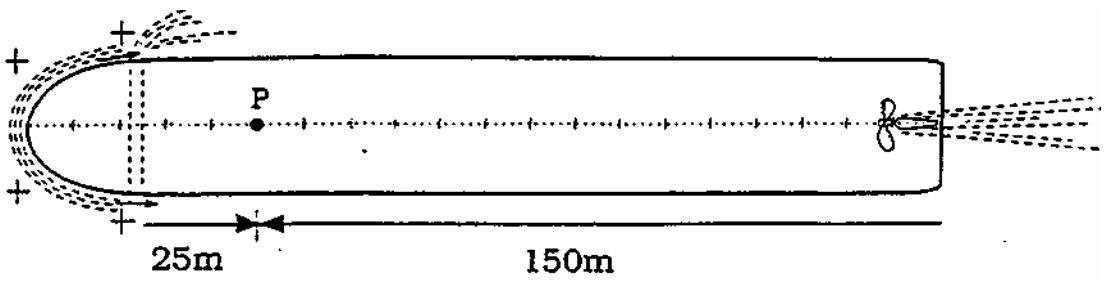

Figure 8-4 Thrusting with headway - not turning

When a ship commences to make headway but is also turning, as with a standing turn or a kick ahead at very low speeds, the effect upon the thruster needs to be considered separately because the pivot point behaves slightly differently. With full rudder applied, as the vessel begins to make headway, the pivot point moves to a position well forward, approximately 1/8 of the ship's length from the bow (see figure 8-5).

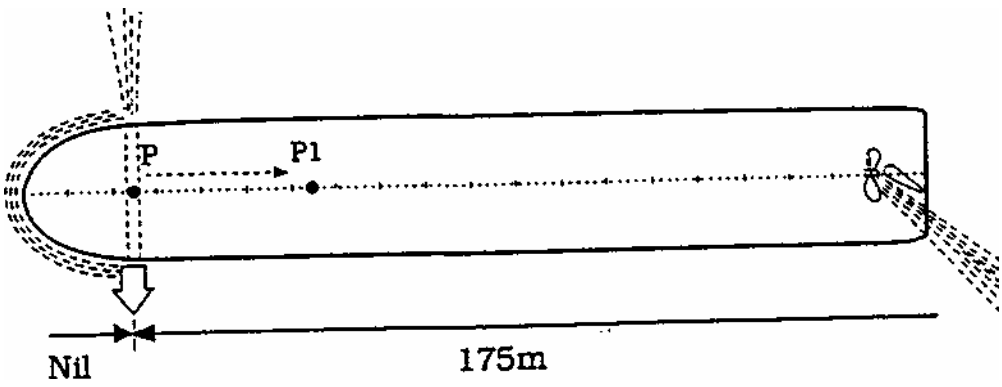

Figure 8-5 Thrusting with headway - turning

This unfortunately coincides very closely with the position of the bow thruster which, for a brief period, will be working right on the pivot point with virtually no turning lever and therefore a poor if not negligible turning moment. The unwary eye looking forward may still feel the bow is turning when in fact it is actually being pushed sideways.

If the ship continues to turn with the power on, the speed will naturally increase and the pivot point will be pushed back to a position roughly 1/2 of the ship's length from forward. Whilst this may improve the turning lever slightly, unfortunately any advantage will be quickly eradicated by the adverse effect of increasing speed.

Whilst a thruster may often 'appear' very useful for controlling heading when making headway at low speeds, it is clearly not very efficient at this task as it is always working too close to the pivot point. It is on the other hand extremely useful, if used in conjunction with the ship's main propulsion, at developing sideways movement or 'lateral motion'.

Lateral Motion

An ability, instinctively, to feel lateral movement in a ship is a very important part of good ship handling and conning a ship by the 'seat of the pants'. It is also, of course, possible to develop lateral motion intentionally, with the judicious use of kicks ahead. This is frequently put to good effect when working a vessel up to a berth.

If the bow thruster is available as well it can be used simultaneously with kicks ahead to generate even better lateral motion, particularly on the bigger class of ship, where the kinetic energy of such a large vessel moving sideways can carry on for quite some time. It is, however, very important to appreciate that there is considerable difference between trying to work a single screw ship to port, as opposed to starboard. This will be illustrated in the following examples.

It is assumed, throughout the following that the ship has a right-handed propeller when making headway. If required it should be relatively easy to review the examples for ships with left-handed propellers and either fixed or variable pitch.

Lateral motion to port

Lateral motion to port can be initiated with good but short kicks ahead on full starboard rudder, in conjunction with a balance amount of thrust to port on the bow thruster. This will also kill any undesirable swing of the bow to starboard. The question of balancing the thruster power against a kick ahead is not always easy and a comparison of thruster and kick ahead power range may be useful as a rough guide (see figure 8-6a).

In an example with a ship of 200m length we might find the following:-

Thruster	1,351 shp	13t
Main Engine	12,000 shp	120t

A kick ahead with full power might realistically only produce some 40 or 50% of the main engine power in terms of side thrust, in this case approximately 48 to 60 tonnes, and this can be apportioned according to rpm.

Dead Slow Ahead	13t
Slow Ahead	27t
Half Ahead	40t
Full Ahead	54t

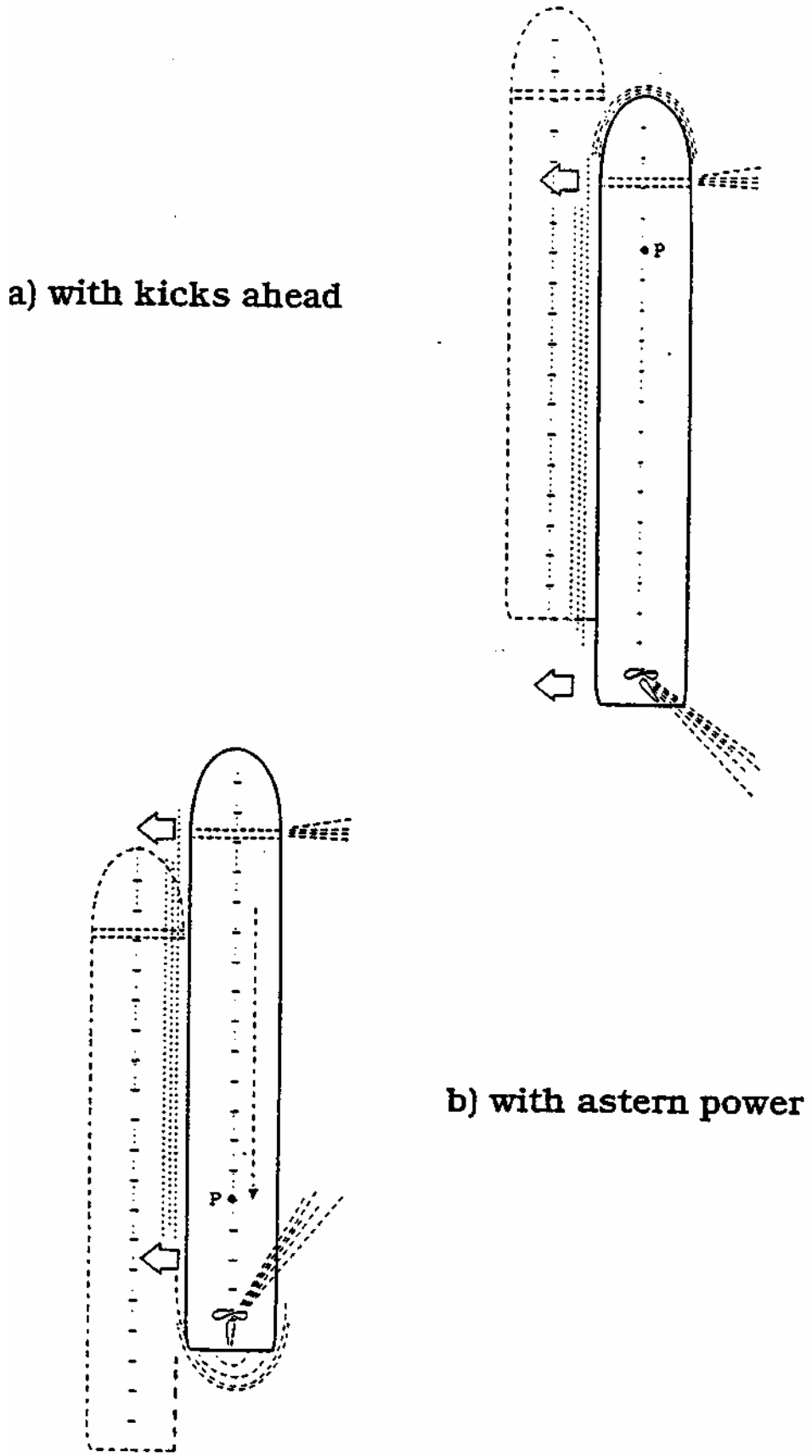

Figure 8-6 Lateral motion to port

Although this is only the most crude of comparisons, even allowing for a considerable percentage of inaccuracy, it still is sufficient to show that:-

* full bow thrust of 13t is only equal to a kick ahead of dead slow.
* a kick ahead with full power is 54t and actually very powerful

Another consideration, particularly on ships with controllable pitch propellers, is that the reaction of a thruster may be much slower than the main propeller and therefore it sometimes needs to be brought in a little earlier than the kick ahead.

It is not the intention of the foregoing to imply that only dead slow ahead should be used. On the contrary, more powerful kicks ahead may frequently be needed.

With these points in mind, however, it may be possible to find something of a compromise between thruster and kick ahead.

When the propeller is put astern, more often than not to reduce the headway which has built up as a result of kicks ahead, the transverse thrust of the propeller on the starboard quarter will continue to thrust the stern to port and the anticipated kick around of the bow to starboard can be stopped by applying port bow thrust (figure 8-6b).

The combination of these two forces will maintain the lateral motion previously generated with kicks ahead, thus making it a relatively easy task to work the ship to port as it will appear to have a natural tendency to do so. This can be very effective with large tonnage ships, even to the extent that some caution may be required to avoid landing too fast and too heavily.

Lateral motion to Starboard.

In comparison with working a ship to port, this is much more problematic and experience has shown that having a bow thruster does not allow any relaxation of forethought to the approach and positioning of the ship when attempting to work a vessel to starboard. It can go very badly wrong!

In figure 8-7a we can see that with kicks ahead there is no apparent problem and in much the same manner as the previous example, when working to port, a combination of kicks ahead with well balanced thruster work will generate lateral motion to starboard.

The problem begins when astern power is applied, usually to control headway. As a result, the bow is likely to swing inexorably to starboard and there is then a naturally tendency, automatically to apply port bow thrust to check it as in figure 8-7b.

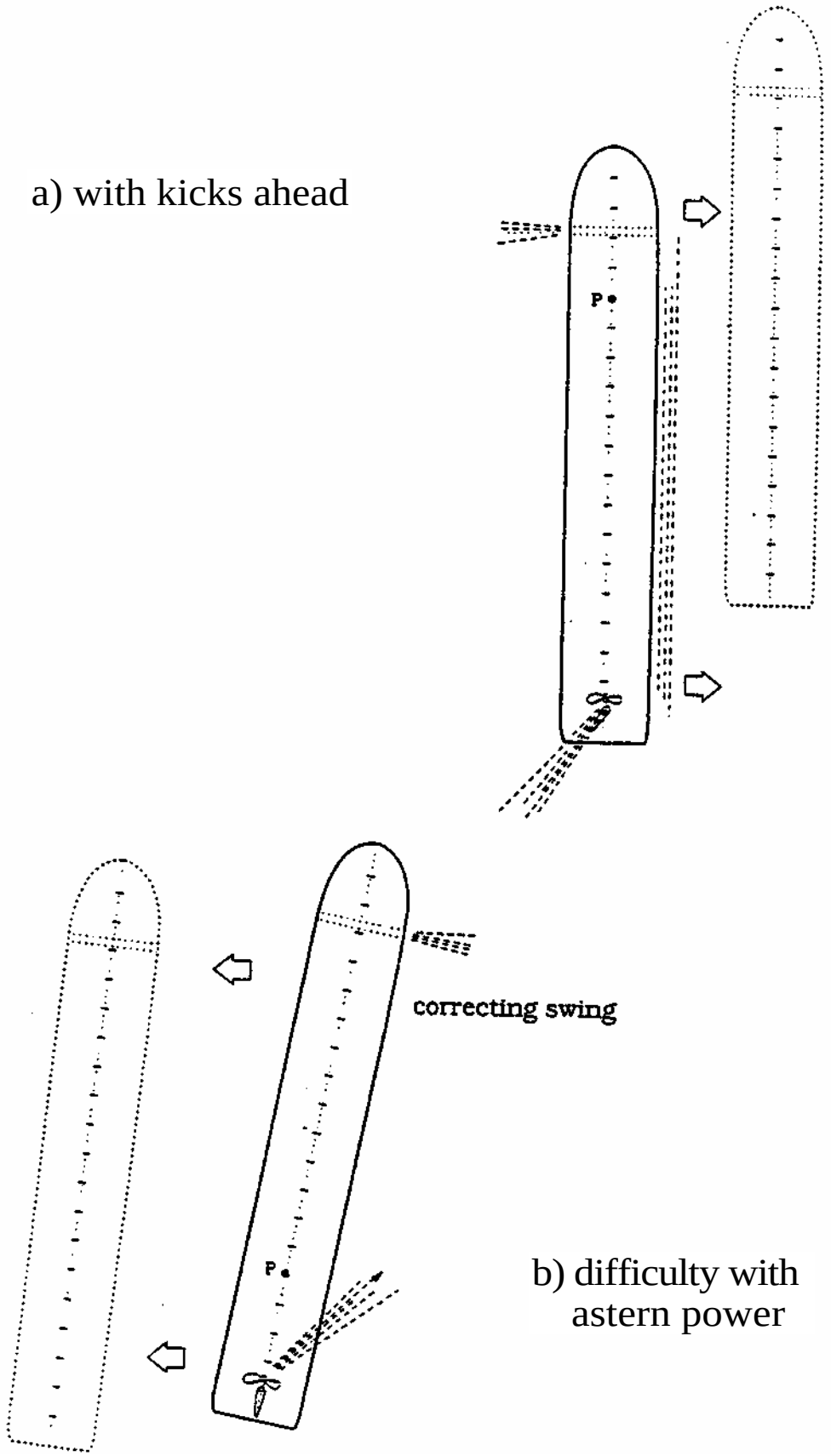

Figure 8-7 Lateral motion to starboard

This combination of transverse thrust aft, pushing the stern to port and the bow being thrust to port forward, results in an insidious and altogether unintentional creation of lateral motion to port which, if too much power is used, can be of sufficient magnitude to take the ship back out to where it was in the first place and perhaps even beyond. It is extremely embarrassing, to see every effort to work the ship to starboard, thwarted by an inexplicable and relentless drift to port, in the opposite direction!

Every care should be taken to avoid placing a ship into a position which creates the need to work it to starboard unnecessarily. This can be achieved by keeping the approach fine and close whenever possible, but above all by keeping stern power to a minimum thus avoiding prolonged and excessive periods with the propeller running astern.

Thrusting with Sternway

Apart from when a ship is stopped it is only when making sternway, with or without the main propulsion working astern, that a bow thruster really proves its worth and becomes relatively efficient. This is because the pivot point has moved aft to a position approximately a 1/4 of the ship's length from the stern (see figure 8-8) and the bow thruster can now work on a respectable turning lever, in this case 125m.

The thruster can be used to steer the ship very effectively as it makes sternway in much the same manner as a rudder and although it doesn't take long to get the feel of it, one or two points are worth keeping in mind .....

* the thruster may be slow coming up to full power.
* the ship will steer quite sluggishly with a tendency to 'flop' either side of the intended heading if permitted to do so.
* the thruster will be slow correcting any large rate of turn.
* looking astern from a bridge aft, the eye does not perceive rate of turn as quickly as it would when looking forward to the bow.

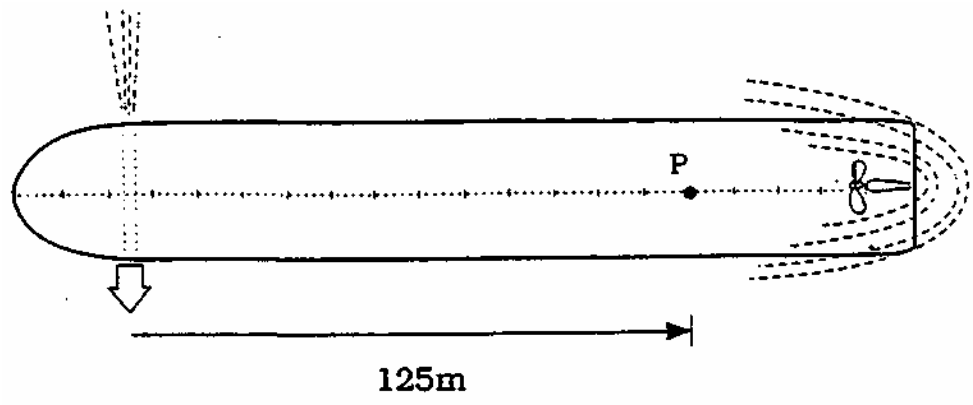

Figure 8-8 Thrusting with sternway - Pivot point

To the unwary, the key elements which may create problems are the sluggish nature of the response times and poor thruster power. Whilst the latter cannot be avoided, it is possible to avoid the former by watching the heading and rate of turn with absolute total concentration. It is unwise to let the ship wander too far off the intended track, or allow too big a rate of turn to develop. If it does it should be hit quickly with a 'bold and vigorous' use of the appropriate thruster power.

At some stage it is going to be imperative to use stern power, perhaps to get or keep the ship moving astern. This then brings in the need to consider the additional effect of transverse thrust during periods when the main propulsion is used astern in conjunction with a bow thruster. To do this it is advantageous to have some idea as to how much force in tonnes, is actually being exerted on the quarter by the transverse thrust.

Using the same ship of 200m with a 12,000 shp main engine, and assuming for the sake of this example that the stern power is only equivalent to 60% of the ahead power, then the main propulsion when running astern will only be generating some 7,200 shp. This is the maximum output and it is quite possible that as little as 10% of this total stern power will be trained onto the hull as transverse thrust, in which case this ship will have a transverse force at full astern of only .....

720 shp **or 7 tonnes.**

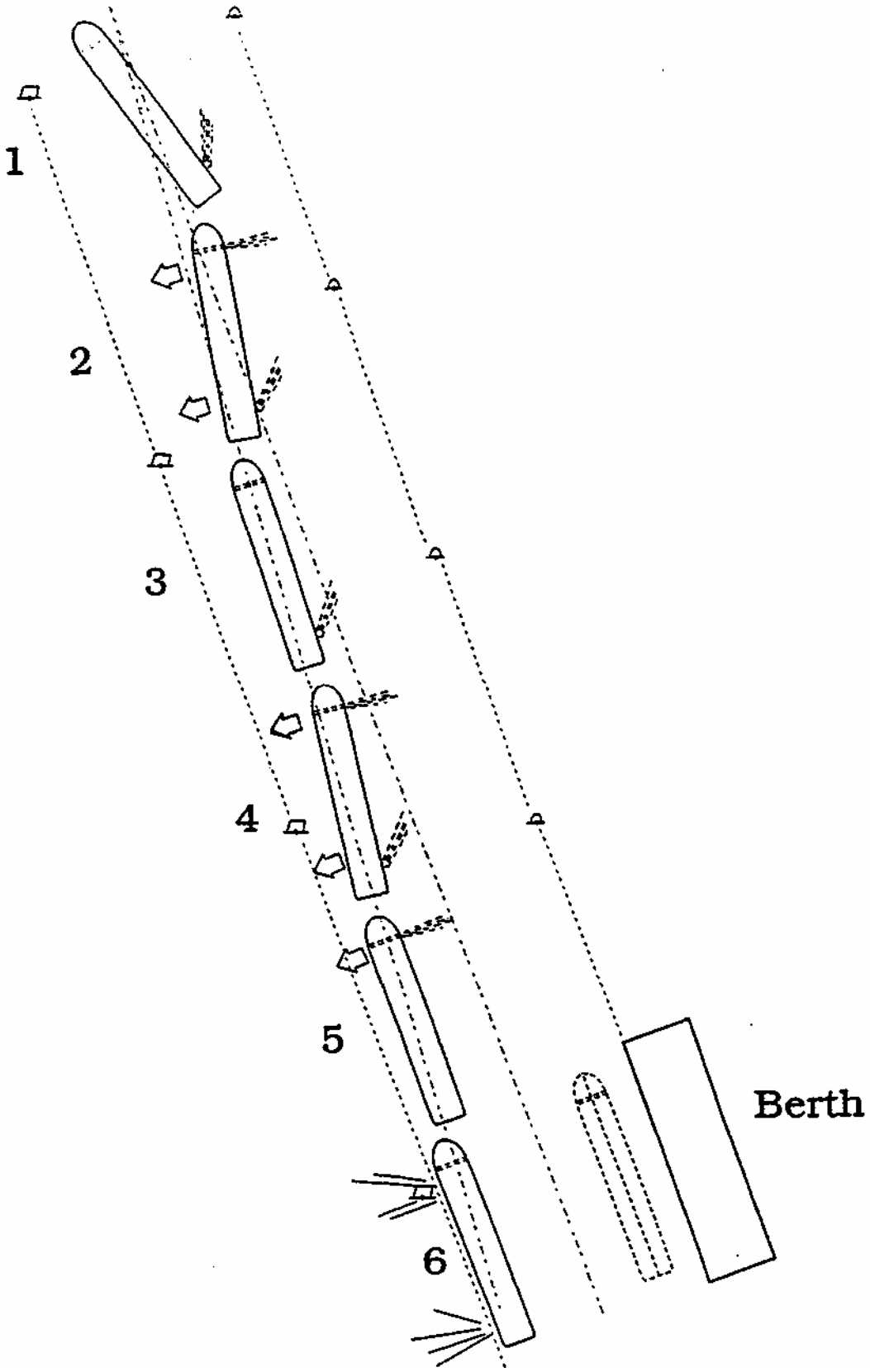

Figure 8-11 Working astern in a channel

Position 1 - The ship at this stage has just entered the channel, is in a good position and the bow is canted to port to allow for a prolonged use of stern power while stern way is built up.

Position 2 - In this position the transverse thrust has either been corrected too late or not at all and the stern has been allowed to drop away from the centre of the channel. If the bow thruster is now applied to correct this, while the main engine is still going astern, for a short period the ship will be under the influence of both transverse thrust and bow thrust which combine to generate lateral motion to port. This is not intentional and may not actually be noticed initially.

Position 3 - Here the ship is steady on the correct heading, but that little bit of lateral movement has positioned the ship slightly off the centre line. Although this is not always seen as a problem at this stage, it might be more advantageous to use the bow thruster vigorously and steer the stern back to the centre of the channel, particularly as the propeller is still working astern and encouraging an unwanted trend to port.

Position 4 - It may now be the case that the sequence of events in position 2 is repeated once, or even twice, and each time the combination of thruster and transverse thrust ensures that the ship maintains its inexorably drift towards the edge of the channel. This can be more pronounced on a vessel of large tonnage, where the kinetic energy developed in moving it sideways can keep it drifting that way for some time, especially when encouraged to do so at frequent intervals. A light wind on the starboard side will augment and help to keep this tendency going remarkably well.

Position 5 - The ship could eventually be getting too close to the edge of the channel, to the extent that it is running out of manoeuvring space and although it is necessary to lift the stern back out into the channel, this is not possible because there is insufficient water to enable the bow to be thrusted to port.

Position 6 - Having lost the space to manoeuvre, the seemingly impossible can occur, with the ship ultimately succumbing to lateral motion, and touching the bottom or hitting an obstruction on the port side.

(It is not uncommon during this manoeuvre for large ships to engage one tug -which is secured aft - where it can very effectively assist with the steering and positioning of the stern, whilst the bow is controlled solely with the thruster).

To avoid being caught in a similar manner, but keeping in mind that every movement is unique, with its own individual set of parameters, the following general tips may be of use.

* get the ship moving smartly astern initially and then keep it moving. This avoids lingering under the effects of leeway or lateral motion, which are worse at slow speeds, or if the ship is allowed to stop.

* it is often tempting to use kicks ahead to reposition the stern. This can easily take all the way off the ship which may then, because it takes some time and effort to get a large vessel moving astern again, drift out of position with leeway. Use kicks ahead with caution!

* don't attempt it in winds that can easily override the thrusters meagre power.

* once the ship is moving astern, in order to limit transverse thrust to a minimum, take every opportunity to reduce or stop the stern power, until it is required to get the ship moving again.

* bring the stern round sufficiently to allow for transverse thrust when the stern power is brought in again.

* watch the heading carefully using the thruster boldly and vigorously to steer and keep the stern on the intended track, the rest will follow! **Working Astern to a berth**

Backing up to a berth on a ship with a bow thruster can be an especially rewarding and satisfying operation. It is particularly useful at resolving the difficulties that were discussed previously in this chapter, of working into a starboard side berth. This manoeuvre is shown in figure 8-12 and in the interest of clarity the important aspects of it are depicted with three separate illustrations.

Position 1 - When approaching the berth, it is important to remember where the pivot point is when the ship is making sternway because the orientation of the ship as it closes the dockside is fundamental to this manoeuvre.

As the ship makes sternway it is, as a result of transverse thrust, apparently turning about its pivot point and tracking astern in a wide arc. This in practical terms, means that the whole ship forward of the pivot point, some 125m in this case, is swinging to starboard as it slowly works astern. By keeping the stern close up to the berth and heading for a point which leaves sufficient distance for the stern to work along the dockside, this tendency can then be used to swing all of the ship forward of the pivot point in towards the berth.

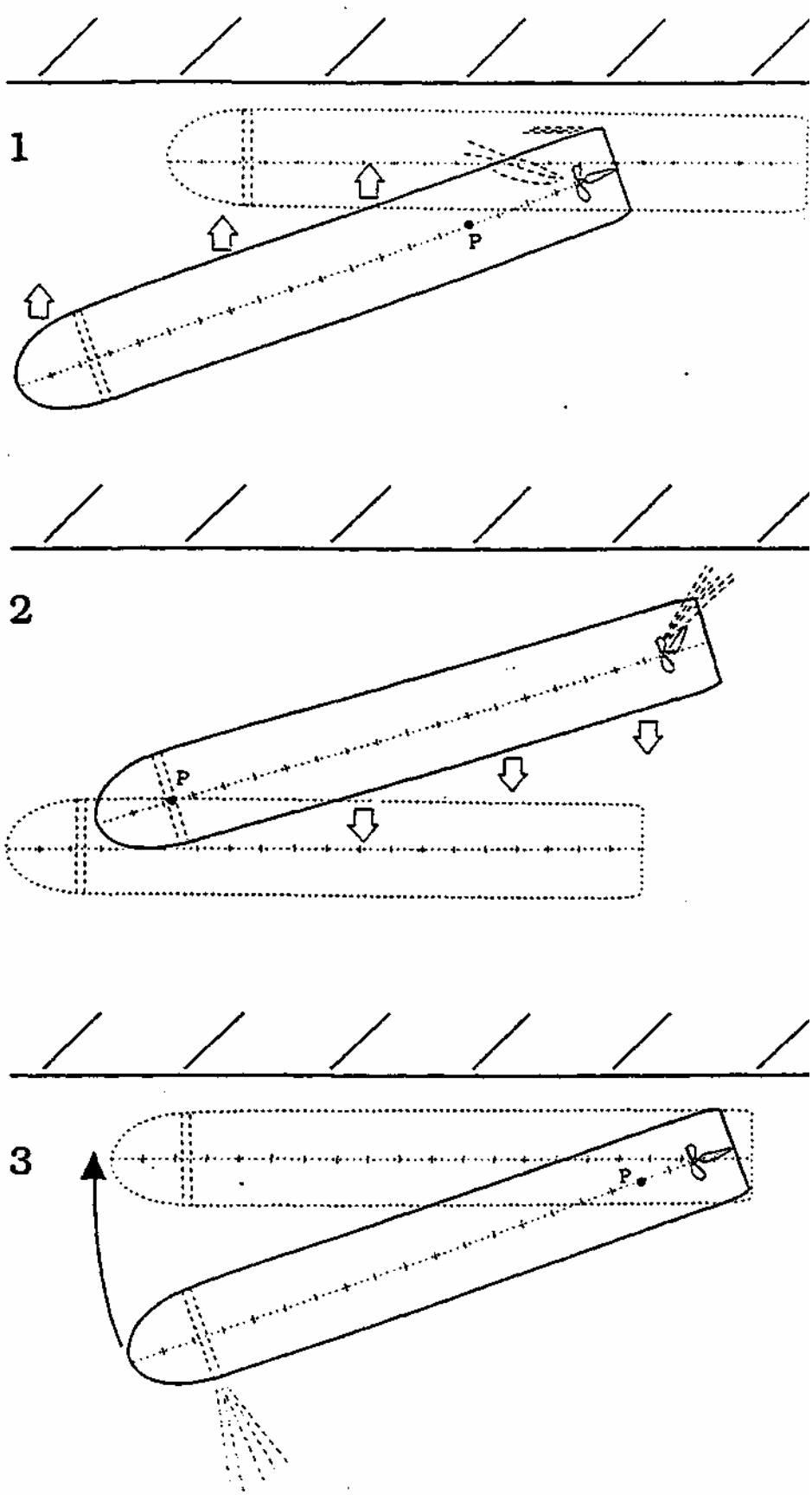

Figure 8-13 Working astern to a berth

If this natural bias of the ship is enhanced with the addition of a bow thruster, the positioning of the stern with the subsequent 'turning in' of the bow, can be achieved with considerable confidence, making this a most satisfying manoeuvre.

Position 2 - One of the big advantages with approaching a berth stern first lies in the fact that the whole range of the ship's main power from dead slow ahead to full ahead is available as an enormous reserve of power, in this case 12,000 shp, with which it is relatively easy to correct the following .....

* an approach speed that is too high.

* inaccurate positioning of the stern.

If it is apparent as the ship approaches the berth that the speed of sternway is too high, or when it is time to stop the ship in any case, the main engine can be put ahead and this considerable power is then used to bring the ship to a fairly smart and abrupt halt. This excellent range of reserve power can also be used in the form of 'kicks ahead' to either bring the stern closer in to the dockside or alternatively lift it clear, thereby working the stern into the required position.

It is very important to be aware of the fact that if the ship is allowed to creep ahead, when using kicks ahead, at the instant it begins to make headway the pivot point moves to a position approximately 1/8 of the length from forward. This means, in this example, with a kick ahead on full starboard rudder, that 175m of the ship aft of the pivot point will be swinging away from the dockside. Remember the difficulties discussed earlier, in developing lateral motion to starboard. This is extremely unwise and should be avoided at all costs, as it may be impossible to get the ship back, particularly with a light offshore wind!

Position 3 - If the stern is in position but the bow has not been brought in close enough, this need not be a problem, because if the ship is stopped and the bow thruster is used, the pivot point will move to a position right aft, and it will be working upon a good turning lever, thus producing its best turning moment with which to bring the bow alongside. This might cause the stern to drop away from the dockside slightly, but what movement there is can be checked with stern lines (or single tug aft).

In situations when it is difficult to work the ship into a starboard side berth, perhaps because of an irritating off shore wind, it is often more expedient to use this method, and get the stern alongside and sorted out initially, before then using the thruster to work the bow in, as opposed to struggling with a seemingly instinctive and automatic determination to always get the bow in first.

Finally, it may be of interest to recall the discussion concerning the difficulties that can,unfortunately, develop when approaching a starboard side berth in the more customary manner, with headway and bow first. If the berth is proving totally unattainable, it is worth keeping in mind, provided there is sufficient water ahead of the ship, that it might be possible to run on a little past the berth, get the bow well round to port, and then work the ship back up to the berth stern first, in the same manner as illustrated in figure 8-13.

Summary

It is the intention in this chapter to look at some of the advantages and disadvantages associated with bow thruster work. Those with little or no experience in working a single screw ship with the aid of a bow thruster will then have the prior knowledge in this area of ship handling and avoid some of those difficulties which are not always obvious before attempting a manoeuvre.

CHAPTER NINE

SPECIAL PROPELLERS AND RUDDERS

Introduction

The majority of vessels upon which most seafarers serve, have a traditional single, fixed pitch propeller and single rudder, which is designed primarily for getting the ship from one fairway buoy to another as economically as possible. This clearly leaves a lot to be desired in terms of manoeuvrability and this is not always acceptable, particularly in trades where the ship is frequently in the confines of pilotage waters.

In order to achieve a better compromise between manoeuvrability and economy some vessels may be fitted with propellers or rudders that differ considerably from the traditional, basic design. There are also a number vessels which are designed with a total commitment to manoeuvrability that have completely different propulsion and steering systems.

Unfortunately this type of ship is in the minority group. Many seafarers with a great deal of experience on conventional ships, and particularly trainee pilots, may occasionally find themselves boarding a ship that is fitted with a propulsion or steering system with which they are totally unfamiliar. With this in mind, this chapter will take a 'broad look' at some of the differing systems and the principles involved, with the hope that it will provide officers with a little general knowledge prior to boarding.

This is the only objective of this chapter. It is not intended that it should be an in depth guide to 'specific' manufacturer's equipment.

Controllable Pitch Propellers

These propellers now have a relatively good track record for reliability and are becoming increasingly common on a wide range of tonnage. Unlike the fixed pitch propeller, the blades of these propellers can be altered, to set whatever pitch is required, across the whole power band from full ahead to full astern.

This is usually achieved with hydraulic pumps or pistons, the older mechanical systems being less able to cope with the size and speeds of the modern vessel. The hydraulic pumps themselves are activated by an electric motor, which is in turn operated by remote bridge control. This may be either pneumatic or electronic. In small craft and in some older systems the bridge control may be mechanical, using cables linked direct to hydraulic rams, but these are becoming increasingly rare.

To use a controllable pitch (CP) propeller the main engine has to be clutched in, so that the propeller is continuously turning, usually at quite high revolutions. As it is neither practicable, nor economical, to run an engine continuously at excessively high rpm, it is important to have some sort of combined control over both rpm and pitch, so that the pitch for slow speeds is balanced with a reduction in revolutions. On most ships this is achieved by installing a 'combinator' which automatically balances engine revolutions against propeller pitch, thus producing a saving in fuel and better propeller performance.

Ahead movements

To use ahead power, a ship with a CP propeller is not restricted to the stepped progression, through dead slow ahead to full ahead, that has for some, been long associated with fixed pitch propellers. Any speed can be selected, simply by adjusting the combinator control to the required setting. It is also possible to set the propeller pitch for extremely low speeds, so that on these occasions when it is essential to proceed at very slow speeds, the propeller and rudder are still active and steerage way can be maintained for a lot longer than is usual. This is particularly advantageous if compared to the many ships with fixed pitched propellers, where the speed for dead slow ahead can sometimes be as high as five or six knots, due to excessive engine revolutions and/or stalling speed of the engine.

Slowing Down

When 'low speed' or 'stop' are demanded, the blades of the CP propeller are set with a very find angle and pitch, to the extent that when they are viewed from astern, they will appear to open like a fan and the propeller will look rather like a closed disc or wheel. If the ship's speed is too high and does not already match the propeller speed, the flow of water through it will be restricted and a great deal of turbulence will develop behind the propeller, which will also have an adverse effect upon the rudder (see figure 9-1). **If therefore, the ship's speed is not reduced slowly and progressively, in much the same way as a large directionally unstable ship, the rudder will be shielded and the steering may become erratic or poor.**

Whilst it is irritating if the steering is poor, it should not be forgotten that CP propellers are instantly available for corrective 'kicks ahead', in a virtually unlimited supply, and are not liable to the restrictions that can be experienced with fixed pitch propellers, such as limited air supplies for starting the engine or delays whilst the engine is put astern.

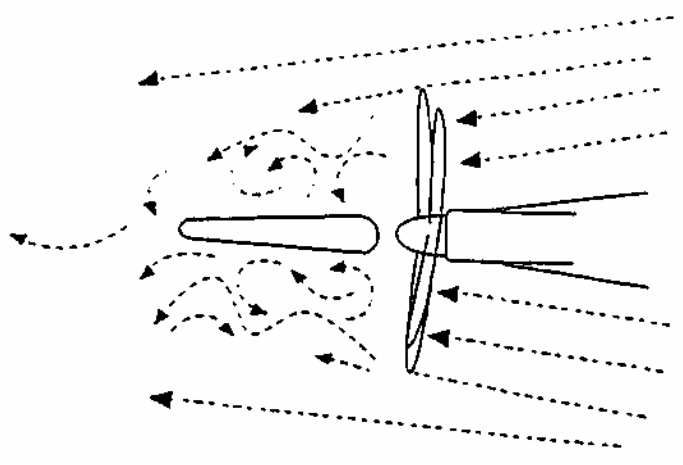

Figure 9-1 Impeding the rudder with fine pitch settings

Transverse Thrust

One of the most common concerns mentioned by many officers, and quite rightly so, is the uncertainty as to which way the bow will cant, if at all, when a controllable pitch (CP) propeller is put astern. This is also something the pilot needs to know when he comes on board.

To answer this question, it is first necessary to know which way the propeller is turning when it is viewed from astern. With the majority of CP propellers it is in an anti-clockwise direction and they are called left-handed. It is important however, when informed that a CP ship is left-handed, that it is not confused with a fixed pitch left-handed ship, because the CP propeller, it should be remembered, rotates the same way all the time. When the pitch is set for stern power, it is only the angle of the blades that has changed and the propeller is still rotating anticlockwise or left-handed.

The effect is now similar to a fixed pitch right handed propeller working astern. The flow of water through the propeller is directed up onto the starboard quarter and may be strong enough to thrust the stern to port, so that the bow is seen to cant or 'kick' to starboard.

It is important to note that the transverse thrust on some ships with a CP propeller may be weak and unreliable, due to vortices or turbulence around the propeller blades. This is usually the result of specific design limitations and might, for example, occur when a CP propeller is designed to operate at slow speeds, with fine pitch settings, but high shaft revolutions. In another example, if the pitch is altered from ahead to astern, some of the inner or lower sections of the blades may be set at rather crude angles and this, too, can create vortices around the

propeller. These characteristics can also have a detrimental effect on the maximum stern power available when compared to a similar ship with a fixed pitch propeller.

It is therefore advisable to exercise some caution, when anticipating the effects of stem power on some CP ships.

Stopped and alongside

On some ships, due to inferior design, age or poor maintenance, when the control stick on the bridge is positioned for stop with zero pitch, the propeller might not be accurately aligned to the same setting and some residual thrust may still exist. Although, with experience, a ship's master can compensate for this error, it is still imperative to remember, that even though 'stop' has been requested, a ship with a CP propeller can unexpectedly creep ahead or astern.

This is very important during the period prior to slipping from a berth, when the engine is started and the shaft is clutched in. If the ropes are not kept tight, particularly while singling up, the vessel may start to move along the dockside with serious consequences if other ships are tied up close ahead or astern. It is also noticeable on some ships that the CP propeller, which is constantly running with high revolutions, can pump quite a lot of water up onto the quarter and along the ship's side, even with zero pitch set. In the case of a left handed CP propeller this water will be flowing along the starboard side.

If then, the ship is laying alongside a solid dockside starboard side to and the ropes are slackened off, this can act like a tide flowing from astern and push the stern away from the dockside (see figure 9-2). It can also make it very difficult to get the stern alongside when berthing, particularly when coming into a berth stern first and there has been a need to use stern power as well. This might not be resolved, until either a stern line is ashore and tight, or the revolutions are reduced.

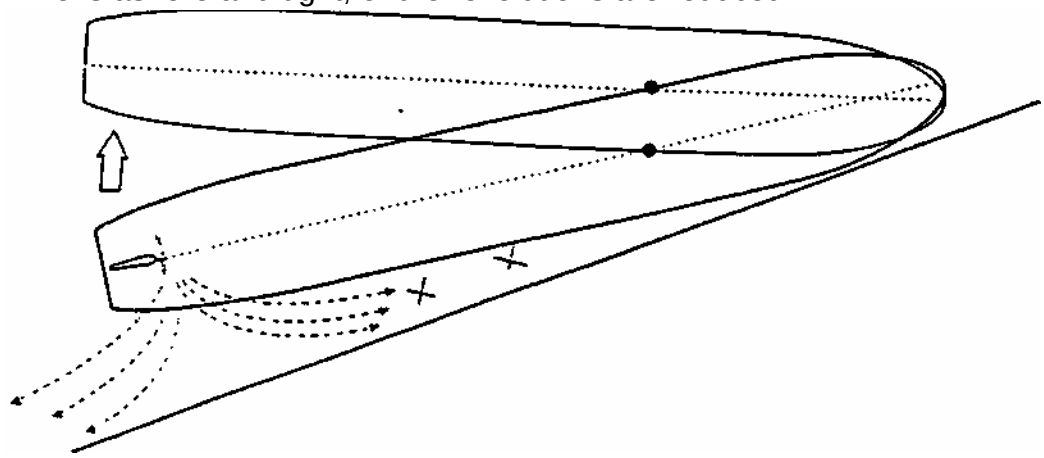

Figure 9-2 Creating eddies and currents on zero pitch

Breakdowns

It is inevitable that complex machinery, no matter how reliable, can eventually be exposed to the risk of failure. Whether this is a result of human error or negligence is another matter. What does matter, is that it is not unknown, as a result of a breakdown in the system, particularly on some older ships, for a CP propeller to either stick, or abort to full ahead, stop, or full astern.

On a modern vessel, in an effort to counteract this eventuality, the hydraulics, electric motors and bridge control are usually backed up with alternative systems, which can be activated by the ship's personnel in the event of a failure. This may of course take a little time. Whilst that might be acceptable in open waters, it would not be satisfactory within the confines of pilotage waters where, for example, a short period of time with a propeller stuck at full power could result in a serious accident! It is therefore worth bearing in mind, that there should be an 'emergency stop' button on the bridge with which to either stop the engine, or declutch the propeller, in an emergency.

Finally, if power to the propeller is lost, it is helpful if the propeller's pitch can be set to full ahead, so that the rudder is not shielded and can be used to some effect, with what steerage way remains.

Propeller Shrouds

In Europe, some years ago, trials were conducted with a vessel whose propeller was placed inside a tube-like shroud or tunnel. The hope was that it would restrict a propeller's wash to a smaller arc and so reduce the erosion of canal and river banks by passing traffic. Whilst this was, indeed, successful more significantly it was noticed that a vessel fitted with a shrouded propeller was considerably more powerful than a comparable vessel with an unshrouded propeller.

Today many vessels, ranging from tugs to the wide variety of traffic using inland waterways, including some coasters, may be fitted with shrouded propellers. Although not common on larger deep sea ships, some do exist and one or two ship yards have even built the occasional VLCC with the propeller encased in a shroud of truly gigantic proportions!

The increase in power output from the propeller, which can be either fixed or controllable pitch, is achieved by reducing the diameter within the shroud from forward to aft (see figure 9-3). Because of this, the propeller is constantly drawing a mass of water into the shroud which then has to be forced out through a smaller aperture, For this to happen, the water has to be ejected out of the shroud at a water has to be ejected out of the shroud at a much higher velocity than it entered and as a result, a positive pressure exists at the aft end of the shroud. It is this which gives the vessel its additional lift or drive, rather like a circular aerofoil!

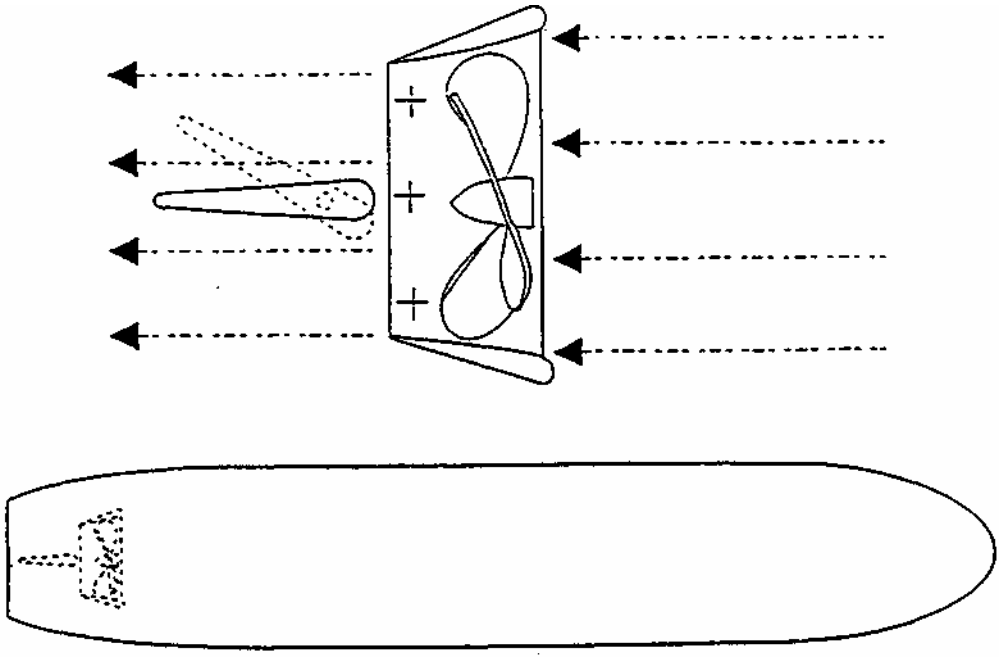

Figure 9-4 Propeller shrouds - fixed tunnels

If a shroud is installed on a large single screw ship, it is usually rigidly attached to the ship's stern rather like a fixed tunnel. In other cases however the shroud, together with its propeller, may rotate as one unit and effectively become a nozzle or azimuth drive. These can be installed as single or twin units and although some coasters may be found with azimuth stern drives, the most common example is the azimuth drive tug, which usually has twin units, either amidships or aft (see figure 9-4).

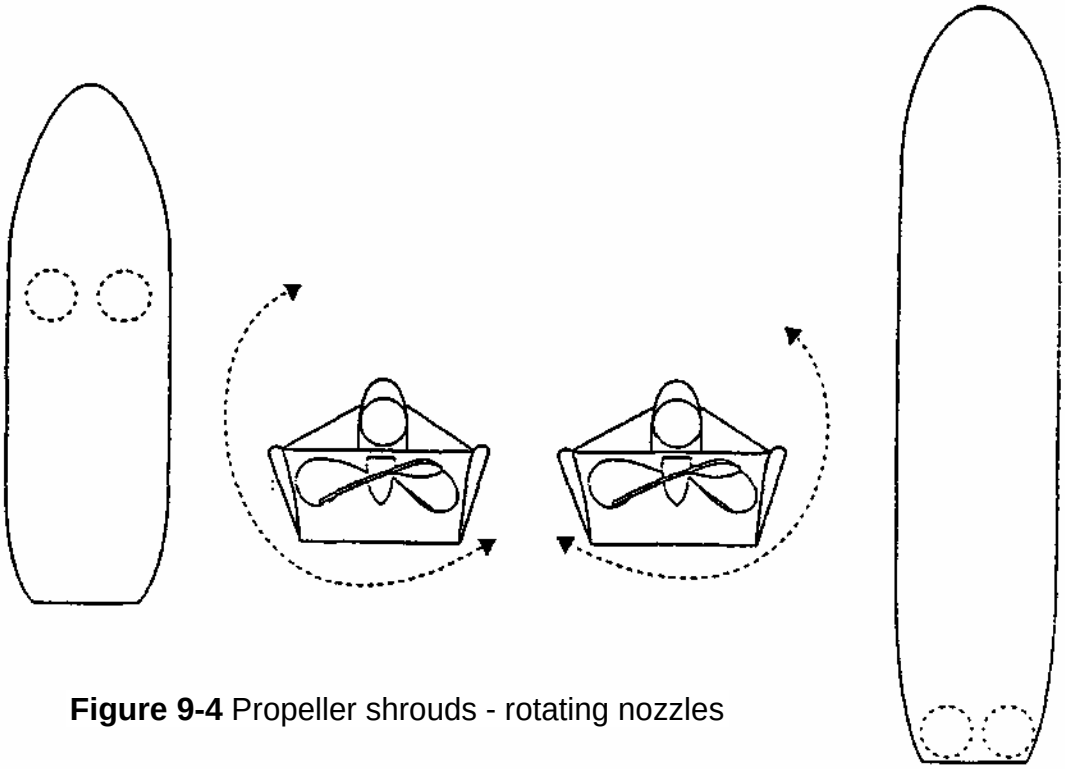

Figure 9-4 Propeller shrouds - rotating nozzles

The design of tugs has benefited enormously from shroud technology, as it enables bollard pull to be increased economically, without installing larger engines and incurring the penalties of higher capital expenditure and rising fuel bills.

It is especially effective at low speeds and high loads. At zero forward speed and full power (the bollard pull condition) about 50% of the thrust comes from the duct alone. At high speeds the drag of the duct is detrimental to its efficiency.

Whilst the fitting of a shroud to the propeller of a conventional single screw ship, is primarily a matter of economic consideration and not one of manoeuvrability, it must, nevertheless, be of some consequence with regards to its handling characteristics. It is quite possible, for example that the higher velocity of water flow from the shroud onto the rudder will improve both the quality of steering and response to kicks ahead at low speeds. The shroud, rather like a skeg, may also give better directional stability to the ship.

These points are however, difficult to quantify and may not be particularly noticeable when on board a ship. What is more noticeable is the effect of a shroud when the propeller is put astern.

Transverse thrust

In normal circumstances, when a conventional right handed propeller is going astern, the water flows diagonally through it and part of the water flow is then deflected up onto the ship's starboard side. If on the other hand it is placed in a shroud, the usual water flow into and out of the propeller is restricted, to the extent that a very little is directed up onto the starboard quarter.

Assuming it is not influenced by any other external forces, this means that it is possible for a ship with a shrouded propeller to run a relatively straight line when slowing down or stopping because there will be no cant of the bow when the propeller is put astern. On the negative side, however, it must be remembered that the fixed shroud is designed for efficiency when making headway and not sternway, so when compared to a similar ship with an unshrouded propeller, the transverse thrust is very poor.

Blockages

It is not unknown, particularly on tugs or coastal ships with azimuth drives and constantly running controllable pitch propellers, for foreign objects to be sucked into the shroud and jam with such force that the engine either stops, or has to be stopped, because the excess load is causing the engine temperatures to rise unacceptably. This usually occurs in shallow, fast flowing, tidal rivers and estuaries, when foreign objects, such as lorry tyres and goodness knows what else have been thrown into the upper reaches of the river and work their way down stream.

There are no immediate answers to this problem, other than keep a sharp look out for any rubbish in the water and be aware that it can happen! In the long term it can only be hoped that pollution controls will improve.

Rudders

The traditional or conventional rudder, employed world wide in thousands of ships, is unfortunately, from a ship handling point of view, something of a compromise between economy and necessity. On sea passages it is continuously being worked, with a succession of small rudder angles, for normal steering purposes and at modest speeds large alterations of course are easily achieved within the customary 35 of maximum rudder angle.

For this fairly simple requirement the rudder, together with its associated hydraulic pumps and electric motors, does not need to be unduly large or complex and will therefore be relatively economical in terms of both installation and running costs.

Whilst bigger more expensive units could be installed, this would not be advantageous, because the basic rudder is not hydrodynamically efficient beyond an angle of 35, or in some cases 45. At any stage up to this angle and 'hard over', the rudder retains a smooth water flow across both faces and this creates a positive pressure on one side but equally important, a negative pressure on the opposite side and this gives the rudder, rather like an aircraft's wing, its lift (see figure 9-5).

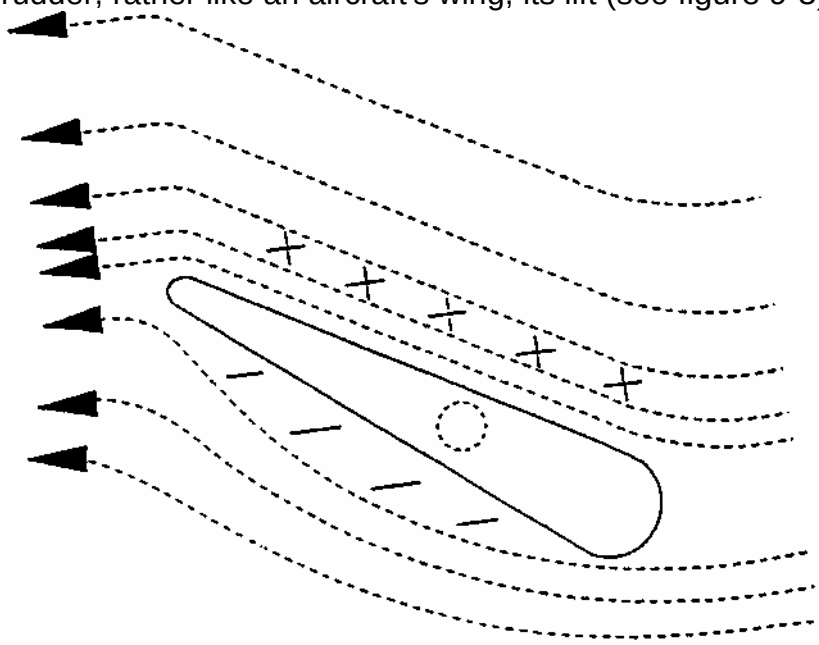

Figure 9-5 Conventional rudder - rudder angle up to 45

Unfortunately, at any angle exceeding 45, the water flow across the rudder, particularly on the low pressure side, becomes progressively more turbulent, until eventually the rudder stalls and it is rendered much less effective (see figure 9-6).

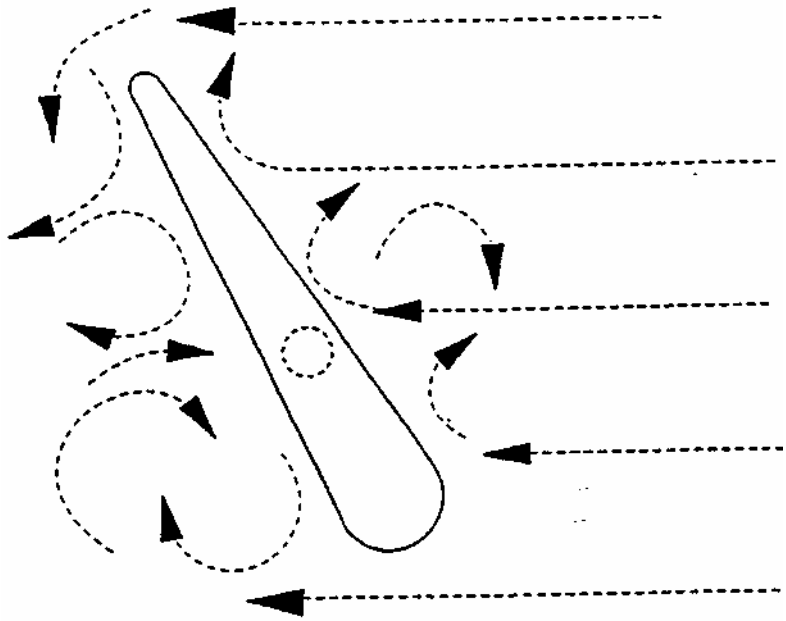

Figure 9-6 Conventional rudder - rudder angles over 45

As a result of this limitation, the conventional rudder, although satisfactory on passage, is some what restricted when it comes to manoeuvrability at slow speeds in confined waters. The exception, perhaps, is the 45 rudder, which in comparison to the more common 35 rudder does perform a little better with regard to turning ability. It is, nevertheless, still a conventional rudder and manufacturers have had a look at alternative designs to improve rudder performance.

Rudder Flaps and Rotors

There are quite a few ships in service which are now fitted with what is essentially a conventional rudder, but with an additional 'flap' on the trailing or aftermost edge of the rudder. These are not unlike the flaps that are deployed on the wings of aircraft and which generate extra lift during take off and landing. When the helm is put over, the main rudder can be set at any angle up to a maximum of 35, in the normal manner, and as the main rudder rotates the flap automatically articulates with it until a maximum angle of 70 is reached (see figure 9-7).

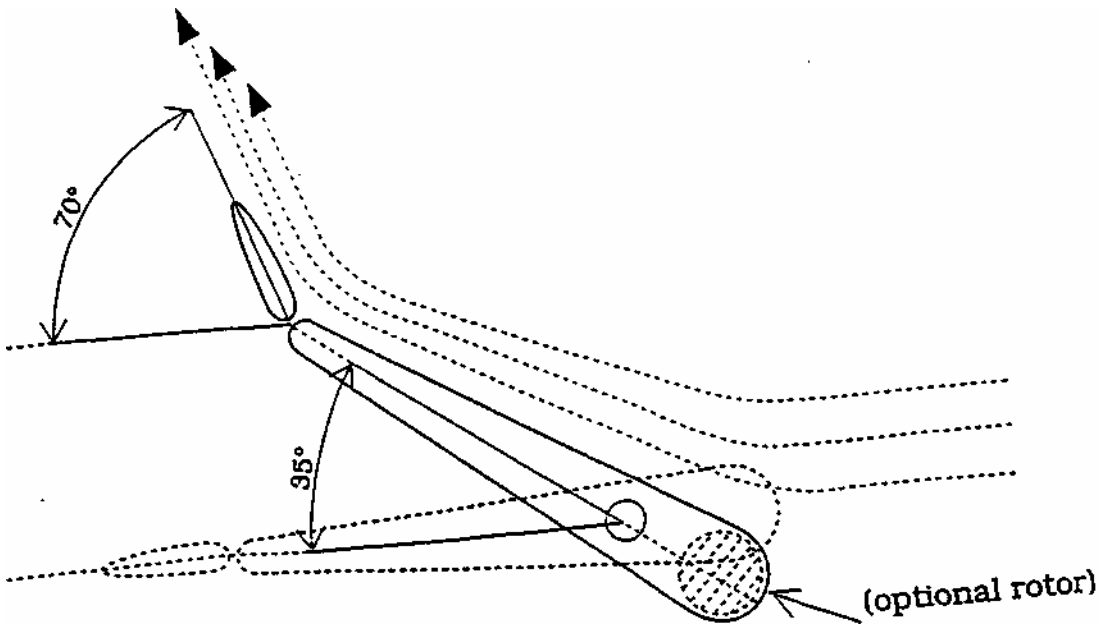

Figure 9-7 Alternative rudder designs - flap rudders

The progressive nature of this articulation in terms of rudder angles, ensures a smooth flow of water over the rudder and flap at all times with good lift and a much improved turning ability over conventional rudders. In some cases, water flow around the rudder may also be enhanced by a rotating cylinder, mounted vertically, on the leading edge of the main rudder. Individual designs vary according to specific manufacturers so that some rudders may have flaps, others rotors and some rotors and flaps. They all however, give excellent performance.

These types of rudder are most commonly known as either 'Becker' or 'Jastram* rudders.

Shaped Rudders

This is an alternative design to the flap and one where the manufacturer has shaped the rudder so that it can be turned to angles of up to 70 and yet still retain excellent performance (see figure 9-8). The forebody of the rudder is elliptical in shape, but runs into a rear body section which is concave. The top and bottom of the rudder is constructed with flanges, which help to channel or contain the water flow across the rudder face as it runs into the concave section, before being deflected out at a sharp angle at the aft end of the rudder.

This type of rudder is commonly known as the 'Single Schilling Rudder'.

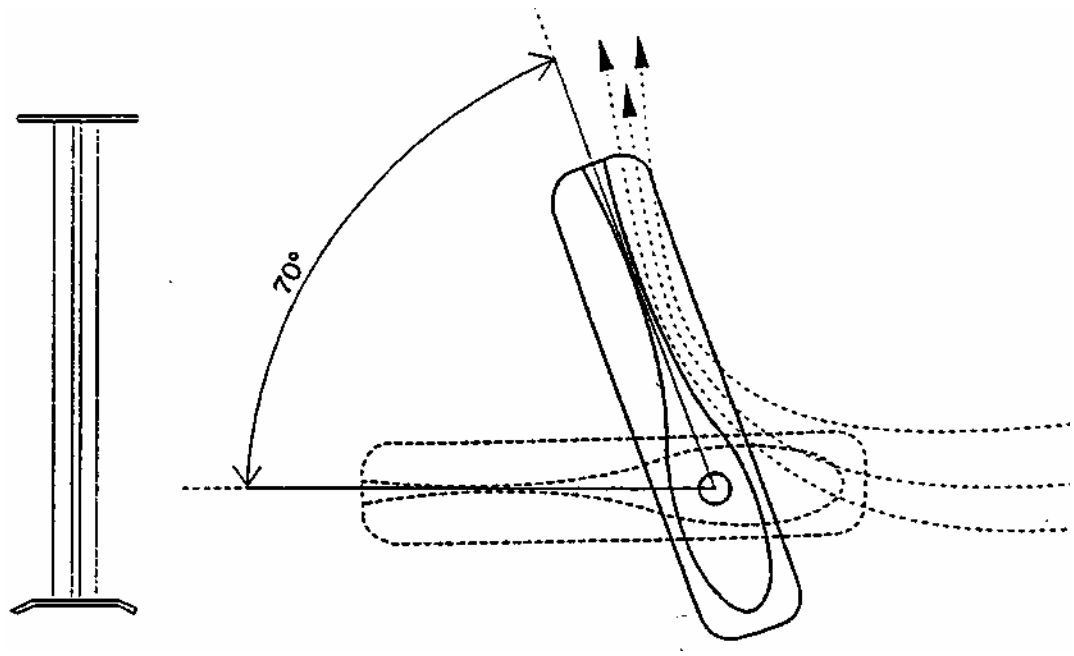

Figure 9-8 Alternative rudder designs - shaped rudders

Operational Aspects

Although all of these specialised rudders deploy to 70 they are still used in much the same way as conventional rudders, but with the advantage of excellent turning ability from the correct use of kicks ahead. When worked in conjunction with a good bow thruster it is possible to develop outstanding lateral motion and care needs to be exercised when landing on the dockside or upon other ships, in case the ship's sideways movement is excessive.

Speed Limitations

With many of these rudders able to rotate to angles of 70 or more on ships which are capable of moderately high speeds, it is not surprising that enormous loads can be placed upon the rudder and its associated systems. Although the rudder and steering gear are built to withstand these loads, without some safeguards they could be seriously damaged. For this reason, some ships with specialised rudders may be fitted with a system override which will limit the use or the angle of the rudders to 35 when the ship's speed exceeds a certain speed. This might, for example, be at around 5 or 6 knots.

Twin Schilling Rudders

This innovative system may now be found on an increasing number of vessels. Although in the past these were mainly of smaller tonnage, the system may now be found on a range of new larger vessels which pilots around the world may find themselves boarding on occasions. Unlike the single flap or shaped rudders that were illustrated in figures 9-7 and 9-8 and which are used in much the same manner as conventional rudders, this system is totally different in both design and operation.

The most unusual but essential feature of this system is the propeller, which even though it is fixed pitch, is constantly running with the main engine permanently on ahead revolutions. For ship handling purposes, the optimum rpm required are those which are normally associated with manoeuvring full ahead, although this can be adjusted if so required, for example to reduce excessive wash.

Immediately astern of the propeller, in place of the conventional rudder, are two Schilling rudders each of which can rotate through a total arc of 145 (see figure 9-9). They are set up so that each rudder has an arc of operation either side of the fore and aft line ranging from an inner angle of 35 right round to an outer angle of 110. The rudders do not act independently of each other but are instead synchronised to work in harmony with each other in response to a single joy stick control on the bridge which is extremely easy to operate.

In figure 9-9 four important rudder positions are illustrated, each of which is in response to a specific joystick setting. The joy stick can be adjusted as required to obtain a wide range of intermediate rudder positions.

Full Ahead - This is the position for normal full ahead with the joystick fully forward. If the joystick is eased back the rudders progressively open outwards, deflecting the propeller's wash or drive and thus reducing the ship's speed.

Bow to Port - If the joystick is put forward and to port at the maximum setting, one rudder goes to 35 and the other to 70. This gives excellent turning ability, particularly at slow speeds.

Full Astern - To obtain stern power up to the equivalent of full astern, the joystick is pulled right back until each rudder has rotated right around to 110 thus closing the gap between them. The propeller's wash is then deflected forwards and works in much the same way as the reverse thrust of the aircraft's jet engine, when it is deployed to stop the aircraft after touch down.

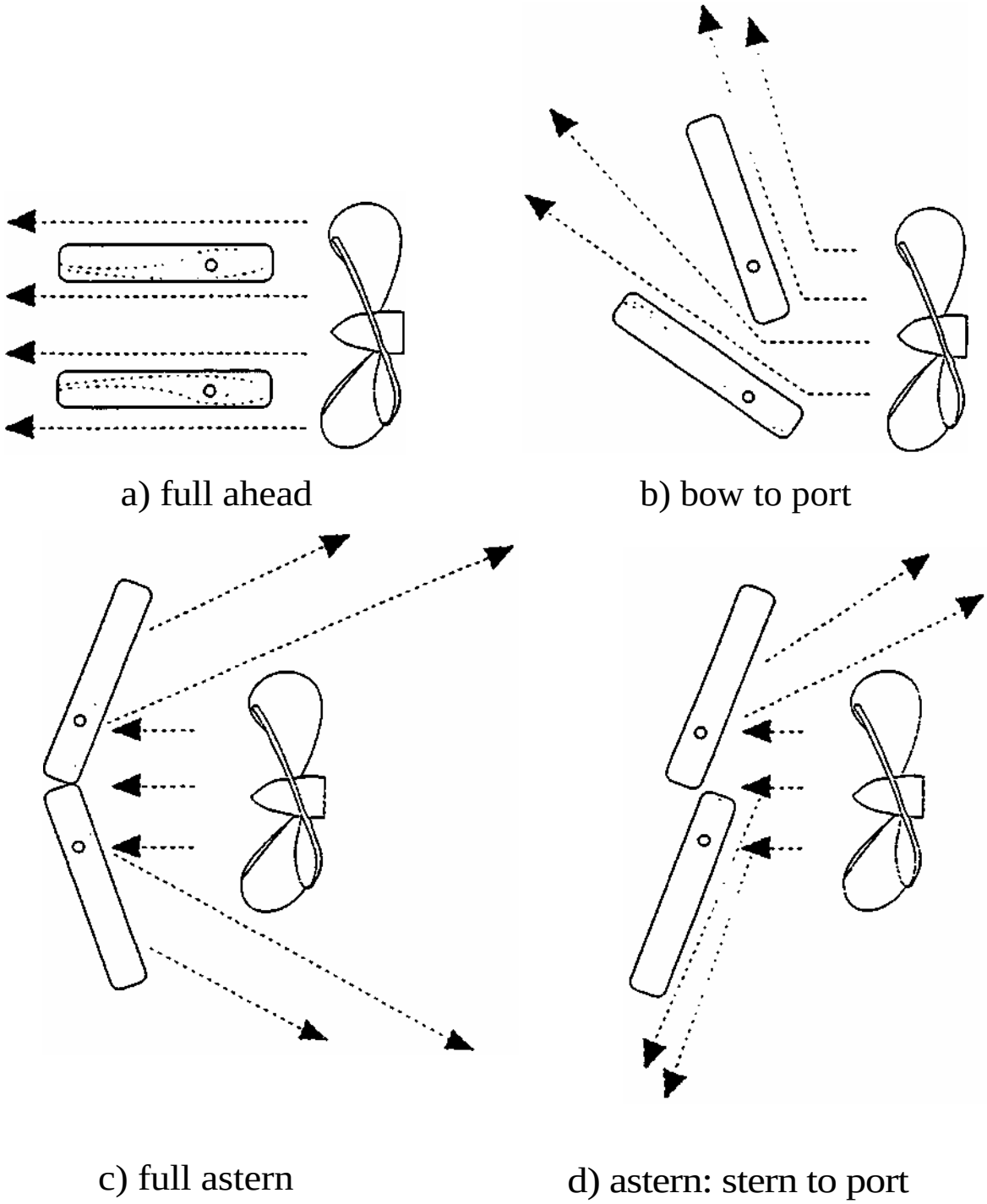

Figure 9-9 Twin Schilling rudders

The equivalent of the conventional 'stop engines' is obtained by adjusting the joystick to the appropriate intermediate neutral setting, so that the rudders are rotated to a position somewhere between full ahead and full astern, which gives neither forward nor astern thrust. This varies a little, because the propeller wash is then deflected sideways and may be affected by such things as depth under the keel, tides, or the close proximity of solid jetties.

Astern.

Stern to port - This figure illustrates one of the most beneficial characteristics of these rudders and one which gives good control of the ship's head, when either slowing down, stopping, or backing, with the rudders deployed for astern thrust. In this particular example the joystick has been eased across in the direction of the port quarter and this will rotate and open out the appropriate rudder, so that the stern is also thrust to port.

This is extremely useful, bearing in mind that it is not always so easy to keep control of the ship's head and speed at the same time, when as an alternative the rudders are employed for kicks ahead.

Whilst this system, with its constantly running propeller, seems a little strange at first, most officers, after a short period of instruction, appear to get the feel of it relatively quickly.

Summary

This chapter has only been concerned with conventional cargo carrying ships, which might have a propulsion or steering system that is a little different from the traditional single rudder and fixed pitch propeller. The objective herein is to furnish inexperienced personnel with a broad knowledge of some of the more common systems. There are other more complex systems in service, on dynamic positioning (DP) vessels for example, but these are highly sophisticated and will always require highly trained and specialised operators.

CHAPTER TEN

TWIN SCREW WORK

Introduction

Whilst it may seem a little strange at first, the techniques for working a twin screw ship are usually picked up quite quickly. Unless the ship is especially cumbersome or unwieldy it doesn't take long to get the feel of the ship.

This is particularly so for masters and officers permanently employed on twin screw ships, such as short haul ferries and cruise ships, where they are able to gain considerable experience conning a twin screw ship. It soon becomes second nature. There are however, one or two important points that may be worth looking at and which might be of use to those less fortunate personnel who have little or no experience of twin screw work, but may occasionally find themselves boarding such a ship.

The essence of twin screw work and a good twin screw ship is not the result of any one factor alone, but rather several important factors which can combine to produce excellent handling characteristics. These are .....

* the rudder configuration.
* the effect of torque.
* the effect of transverse thrust.
* the pivot point.
* turning ability.

The Rudder configuration

Initially this might seem a somewhat odd topic to discuss, as it is all too easy to assume that the rudders are adequately designed for the task. There are, however, a few ships in service, in particular some older generation container ships, which although twin screw, are unfortunately built with only one rudder. On this type of ship the rudder is situated on the centre line between the two propellers. Even when 'hard over' it may be either wholly or partially out of the propellers' helical discharge (see figure 10-1). This means that response to the rudder may be poor at very slow speeds because it may be solely reliant upon ship's speed and not propeller wash to generate water flow across it.

This is most noticeable when getting under way from stopped. The ship takes a long time to answer the helm and travels quite some distance in the interim time interval. If this type of ship is exposed to any adverse manoeuvring conditions, such as shallow water or contrary winds and tides, it is likely to become seriously unmanageable at slow speeds and considerable care should be exercised, with some emphasis upon the need for adequate tug support. In view of experiences such as this, it is desirable to have two rudders on twin propeller ships, so that

Figure 10-1 Twin screw - single rudder

each rudder is positioned within the helical discharge of an individual propeller. They can then work interactively, in the same manner as the propeller and rudder on a single screw ship.

The effect of Torque

The term torque is used in this instance to describe the natural turning effect that is created by one engine pushing ahead and one engine pulling astern, or to a lesser extent, just one of those engines being used. This contributes towards good twin screw turning ability, but occasionally it is possible to come across a ship where the effect will be extremely disappointing, because the ship is designed with the propellers too close together (see figure 10-2).

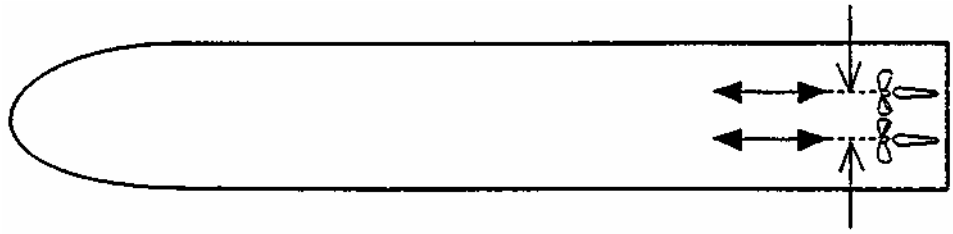

Figure 10-2 Propellers too close together

A few specialised ships, such as sail training ships with auxiliary power and some low powered naval vessels, are naturally narrow beamed and therefore torque is poor. In the worst cases a prolonged period with one engine ahead and the other astern, even with full power, will produce an insignificant or negligible rate of turn. In these circumstances the master will often advise, quite correctly, that the propellers are used together as one, in much the same manner as a single screw ship.

In view of the problems associated with handling twin screw ships with single rudders, or propellers too close together, or both, a better design is one where there are twin rudders and where the propellers have as much athwartship spacing as possible (see figure 10-3). Having said this, it is possible to go from one extreme to the other and board a ship where the propeller blades extend well out beyond the fore and aft line of the ship's side, With this type of ship, when close to the dockside during berthing and unberthing, the master may have no choice but to insist that the inboard propeller is stopped and in the case of controllable pitch propellers, the shafts as well.

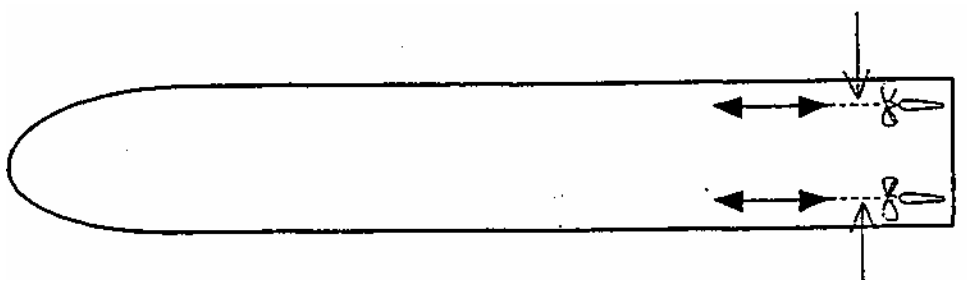

Figure 10-3 Propellers well spread

Fortunately, if they are on a regular run, ships with these unique handling problems tend to become well known within a pilotage district and individual pilots are forewarned before boarding them. There will always, however, be exceptions and many pilots around the world may not have previous experience of this type of ship.

The effect of Transverse Thrust

It is essential that when the appropriate propeller is put astern to assist turning ability that the transverse thrust is directed up onto the correct quarter. To ascertain if this is so it is necessary to look at the direction of rotation of each propeller, when viewed from astern, and determine whether they are either .....

* outward turning.

or

* inward turning.

Outward turning fixed pitch propellers

In relation to each other when going ahead, the blades of these propellers are outward turning in the upper half of their circle of rotation, when viewed from astern (see figure 10-4a). If however, the starboard propeller is put astern, to assist for example in turning the ship to starboard, it will now be rotating in the opposite direction (see figure 10-4b). This propeller is therefore behaving in exactly the same way as the right handed propeller on a single screw ship and part of its helical discharge will be deflected up and onto the starboard quarter. The resultant transverse thrust will cant the bow to starboard, not only assisting the turn, but also working in conjunction with both the rudders and propeller torque.

Inward turning fixed pitch propellers.

These propellers, when viewed from astern, are now inward turning in the upper half of their circle of rotation (see figure 10-5a). If, once again, the ship is turning to starboard and the starboard propeller put astern to assist, it will be rotating in the opposite direction (see figure 10-5b). This propeller is acting in the same way as a left handed propeller on a single screw ship, so whilst going astern part of the helical discharge will be deflected up and towards the port quarter! The resultant transverse thrust will attempt to cant the bow to port, not only in the opposite direction to the desired turn, but also working against the rudders and propeller torque. The astern wash from the starboard propeller may also seriously deflect the smooth flow of water from the port propeller onto its own rudder.

The effect of inward turning propellers upon a ship can be extremely severe and render it totally unmanageable from a ship handling point of view. In the worst case it has been found necessary when manoeuvring, to stop one engine completely and work the vessel in the same manner as a single screw ship.

It is difficult to imagine why ships are built with inward turning propellers if they are so difficult to handle, but apparently this configuration does give a better economical performance in terms of fuel consumption, particularly on long passages!

Controllable pitch propellers

With a CP propeller rotating the same way all the time it can, at first, seem a little confusing when trying to understand whether they should be inward or outward turning for twin screw work. To work this out it is best to start with the assumption that the inside propeller during a turn must, when it is set with astern pitch, give transverse thrust onto the appropriate quarter. Looking at figure 10-4b the starboard propeller would therefore need to be turning anticlockwise or left-handed, but looking at figure 10-5b the port propeller would need to be rotating clockwise or right-handed. The two CP propellers thus need to be inward turning

a) ahead only

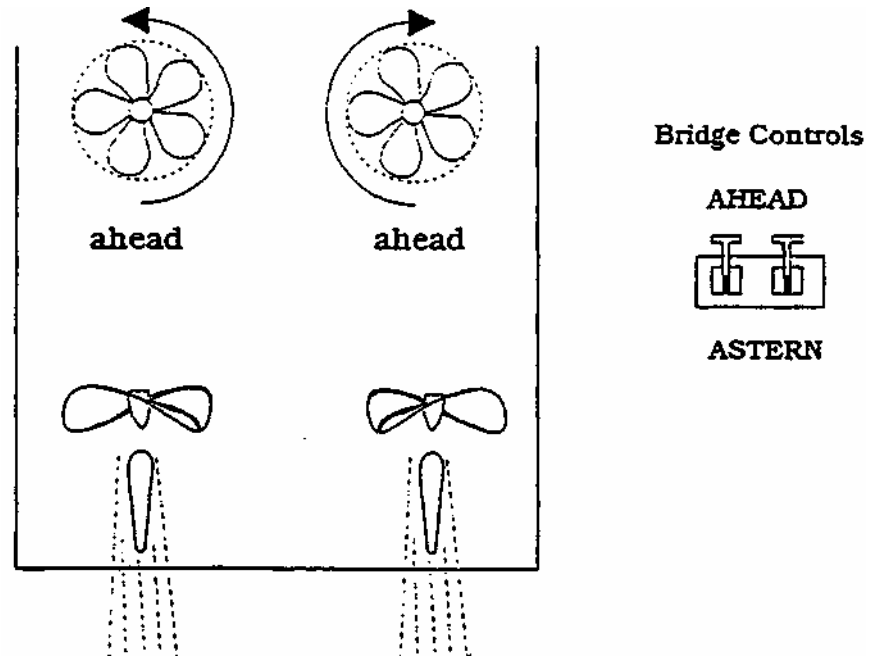

b) one engine astern

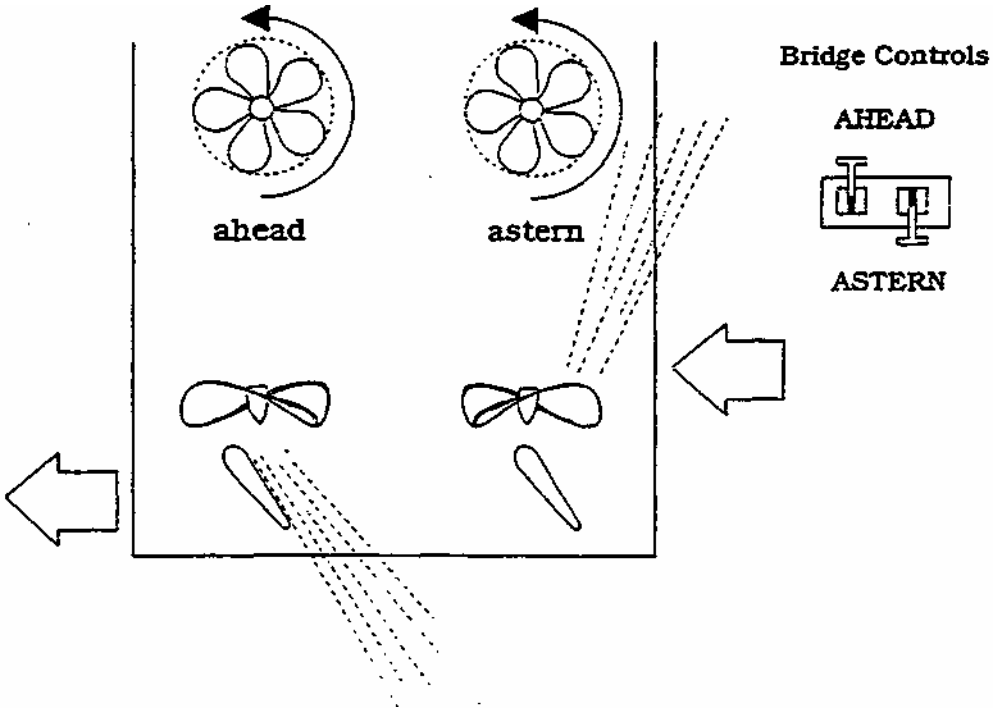

Figure 10-4 Twin fixed pitch propellers - Outward turning

a) ahead only

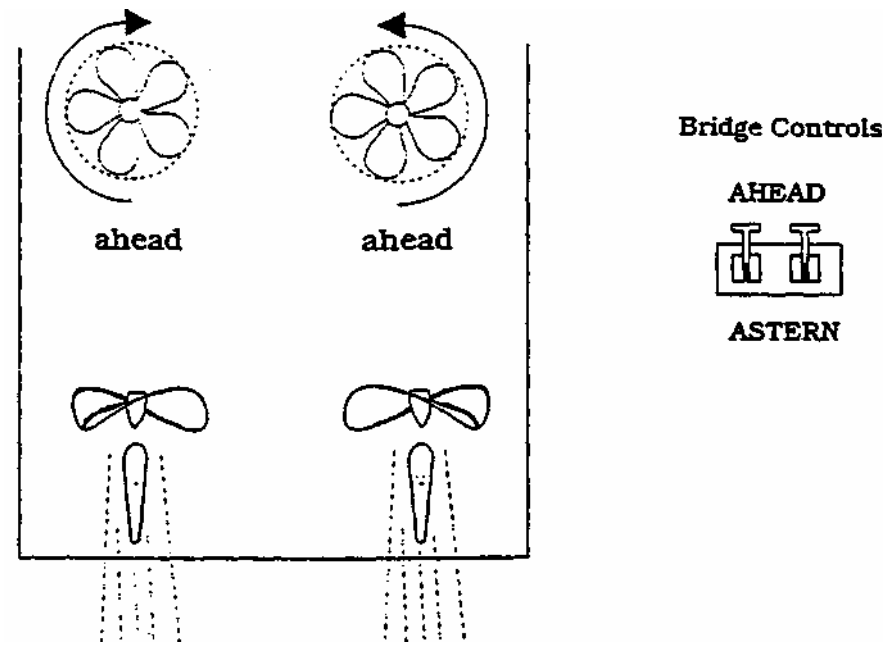

b) one engine astern

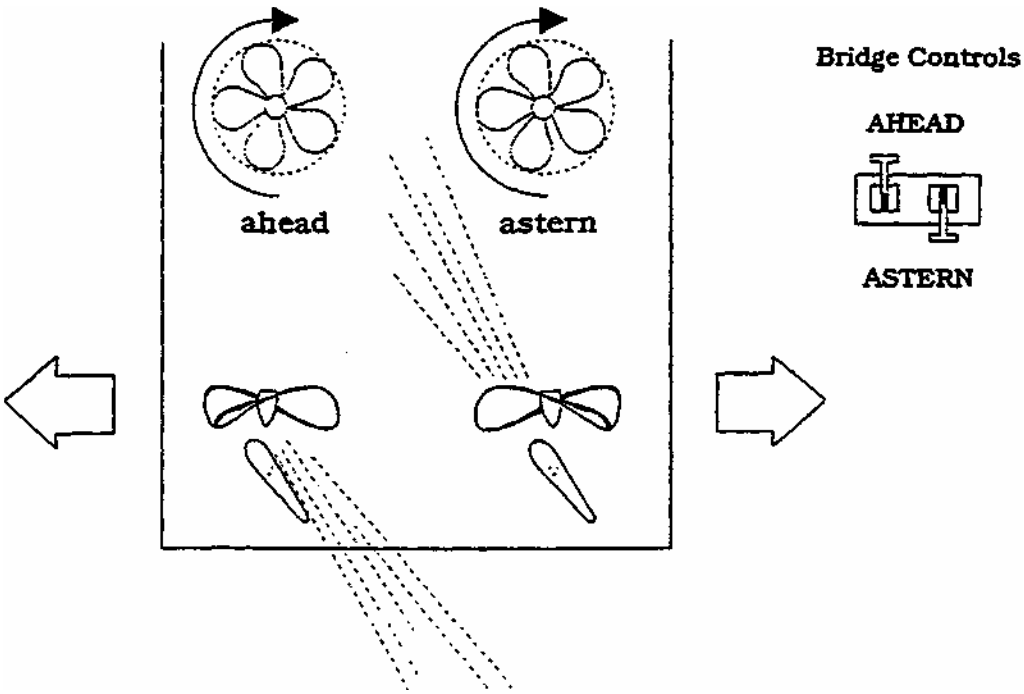

Figure 10-5 Twin fixed pitch propellers - Inward turning

or 'handed' as it is sometimes called, in order to achieve the same results as outward turning fixed pitch propellers.

Although, in general, ships are built to give the correct twin screw response, there are in fact a few ships in existence which do not have handed twin CP propellers, but instead have twin propellers which rotate the same way and they may be either right or left handed. It can actually be difficult to ascertain from the ship's personnel which way they turn until stern power is used and it is possible to see which way the bow cants. This is another example of an unusual case where again, it is best to use the two propellers as one, rather like a single screw ship.

The pivot point

Irrespective of what rudder and propeller configuration a ship has, the fundamental principles concerning the pivot point and the forces involved remain the same. All of those principles which were relevant to the handling of a single screw ship are of equal importance when working a twin screw ship. The only difference being the greater variety of options available in terms of engine power.

With Sternway

It should still be borne in mind, when the ship is moving astern, that the pivot point will be approximately a 1/4 of the ship's length from the stern and that any forces created by the propellers, whether astern or ahead, will be working upon a small turning lever and therefore generating relatively poor turning moments (see figure 10-6a). The only exception to this would be excessively powerful vessels, such as a modern warship, where the immense power can have a tendency to conceal this fact.

With Headway

On the other hand, when the ship is making headway, the pivot point will move to a position roughly 1/8 to 1/3 of the ship's length from forward and vary according to the ship's speed and whether it is turning or steady. If the propellers are now used either ahead or astern they will be working upon a much better turning lever and produce excellent turning moments (see figure 10-6b). In view of this some masters, when turning a twin screw ship in a restricted area, prefer to back up as far as practicable first, and then make some headway whilst turning, because it results in a much better rate of turn. Again the only exception would be immensely powerful ships, where the difference is not discerned and there is a tendency to turn on the spot.

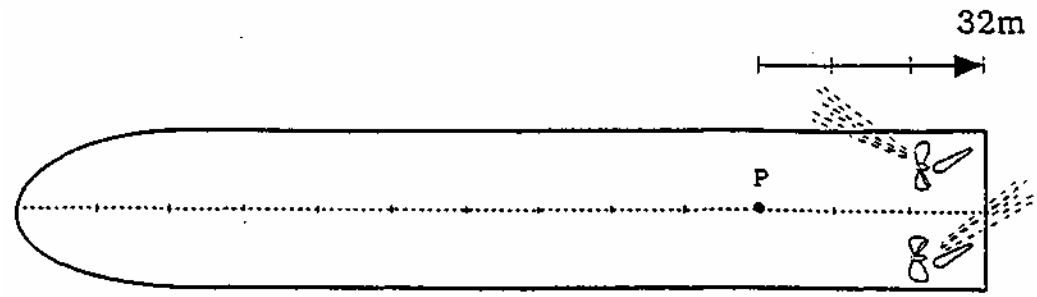

a) with sternway

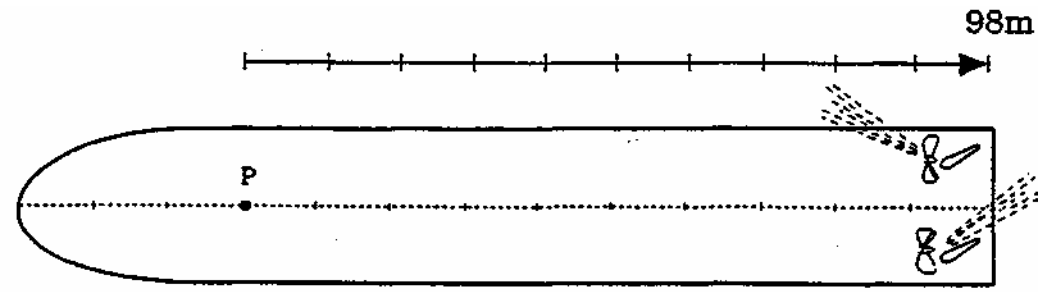

b) with headway: one engine astern

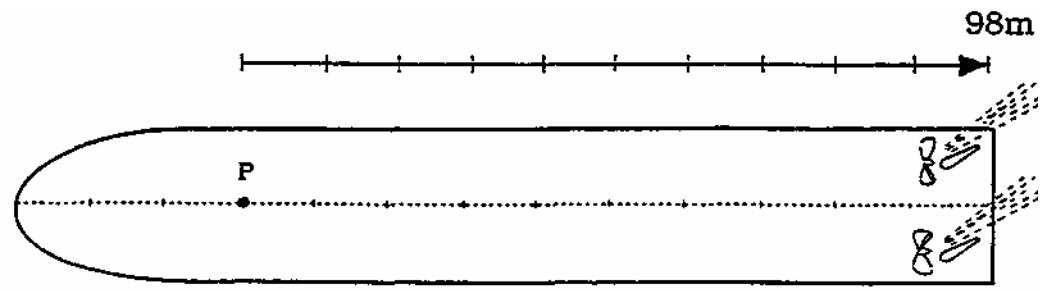

c) with headway: both engines ahead

Figure 10-6 Twin screw turning ability

Turning ability

The ability to develop rate of turn, with a twin screw ship of modest power is perhaps best viewed in two different categories .....

* low speed manoeuvring.
* manoeuvring at higher speeds.

Turning ability at low speed

Like any other ship manoeuvring at low speeds, often within the confines of a port complex, the turning ability of a twin screw ship has constantly to be balanced with the need to monitor the ship's speed and keep it under control. The big advantage of a twin screw ship, and this is perhaps the best way to view it, is that the appropriate engine can be used ahead with full rudder to develop what is essentially a prolonged 'kick ahead' whilst the other engine is used astern, to keep the speed down.

By going astern on the inside engine the ship is kept permanently in the first stage of a standing turn, with the pivot point approximately 1/8L from the bow and lateral resistance to the turn constantly low (see chapter 3 - Turning figure 3-4).
The engine which is going ahead and its associated rudder are therefore permanently working on an excellent turning lever with minimal lateral resistance.
The engines can of course be balanced as so required to either maintain headway, stop, or ease the ship back, but it should be remembered that this will shift the pivot point and affect turning ability accordingly.

At that point during ship handling, when ahead power can no longer be used and stern power has to be used to stop the vessel, the twin screw ship is something of a luxury over the single screw ship. Any undesirable cant of the bow with stern power can be checked by adjusting the balance of power between the two engines as they are going astern and, if so required, this can also be used to develop small rates of turn which give fine control over the bow while stopping.

Turning ability at speed

When handling a twin screw ship at moderate speeds however, often in the confines of a channel, river or estuary, it is worth recalling some of the points which were relevant to handling single screw ships .....

* transverse thrust is a poor turning force.
* the wash from a propeller going astern and therefore transverse thrust, will not reach the hull if the speed is too high.
* the rudder forces generated with ahead power are an excellent turning force.
* constant speed turning circles are always similar no matter what the speed.
* correctly applied 'kicks ahead' are the most effective way to tighten a turn.

These points are particularly significant because there is often an automatic tendency with inexperience, to rely upon backing one engine to tighten a difficult turn, at a bend in a channel for instance. Whilst this is absolutely fine at low manoeuvring speeds it is very unwise at moderate speeds, for example over 5 or 6 knots. This is because transverse thrust is a poor force, in comparison to rudder force and it will actually result in a reduction of the vessel's rate of turn and a larger turning circle.

Alternatively, the rudders could be put hard over and both engines used with sufficient power to generate a good kick ahead which will, if the speed is not excessive, result in a much tighter turning circle (see figure 10-6c). This will be extremely important, when negotiating a difficult turn with adverse conditions, such as shallow water or high adverse winds.

As so often is the case, excessive speed is the greatest enemy and it must always be brought well down, before the advantages of either kicks ahead or twin screw work can be fully utilised.

Split rudder operation

A number of new ships are entering service which have the ability to "split" the rudders, i.e. to operate them independently of each other. This can be very useful in a manoeuvring situation, because it allows the rudder force to be maximised when one propeller is being operated ahead and the other astern, to move the ship's stern laterally. When proceeding normally, the rudders are synchronised and are only split when actually berthing or swinging the ship.

When it is required to turn the ship or move her laterally, the greatest efficiency is obtained by having the appropriate rudder turned "inwards" within the helical discharge of the propeller which is operating ahead - the *active* rudder. There are two alternatives which can be applied to the other rudder - the *passive* rudder.

The method which is favoured by many masters and pilots is to "toe in" the rudders, i.e. both rudders are turned inwards and remain there. The appropriate rudder is now in a position to maximise the rudder force when either engine is operated ahead. The passive rudder may partially obstruct the flow into the (astern) propeller and reduce its effect. On some installations, when a propeller is operated astern, the rudder automatically returns to midships. Any blanking effect is therefore minimised. (It is possible that when "toed in", the passive rudder could direct the helical discharge in a manner to enhance the transverse thrust, but due to differing stern shapes and water turbulence around the propellers, it is difficult to be specific on this matter).

The alternative method is to adjust the rudders manually to correspond with each alteration in power settings - i.e. to apply appropriate (inwards) rudder to the ahead propeller and midships the rudder of the astern propeller on *every* occasion.

When berthing a ship there are many demands on the master's or pilot's concentration, so there is a considerable advantage in employing the "toe in" method. The need constantly to co-ordinate rudder position and timing with power settings is eliminated and the possibility of error is correspondingly reduced.

The above applies to conventional twin screw independent rudder installations, and may not necessarily apply to complex advanced systems presently being developed. Such installations should be considered on their own merits.

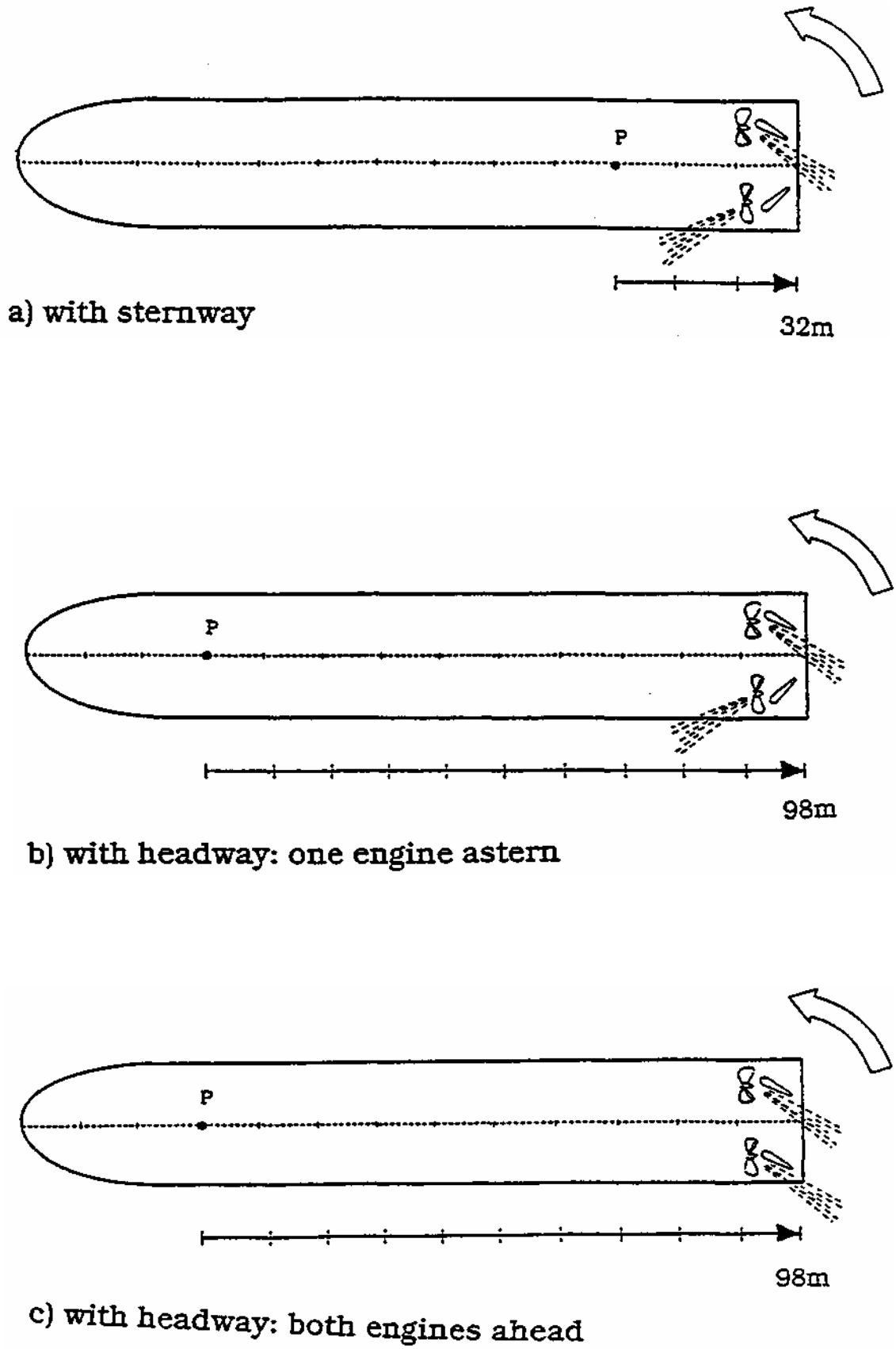

Figure 10-6 Twin screw turning ability with rudders "spilit"

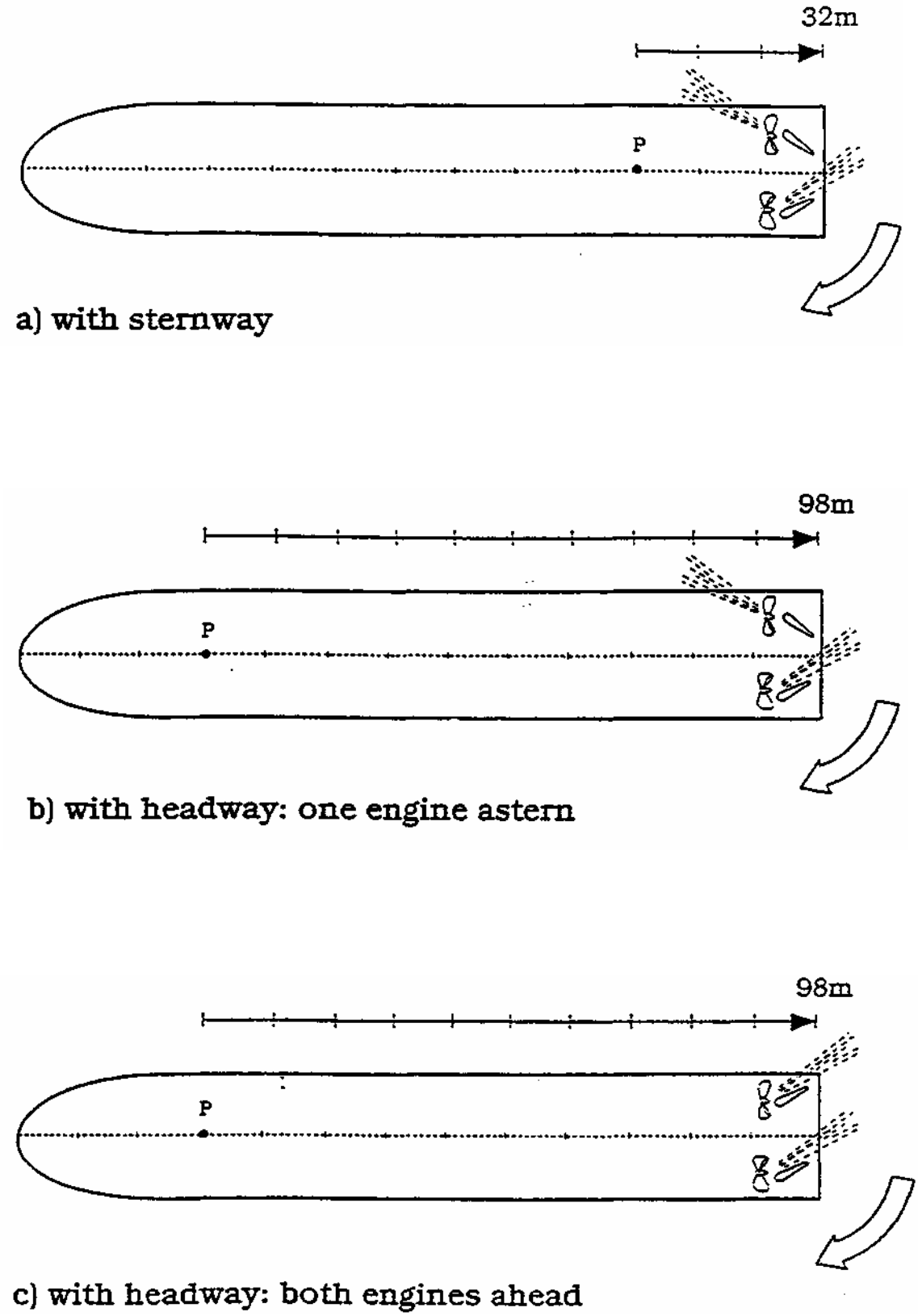

Figure 10-7 Twin screw turning ability with rudders "split"

CHAPTER 11

SHIP TO SHIP OPERATIONS

Ship to Ship Transfer Operations (sometimes called "Lightering", Lightening", or simply "S.T.S.") take place frequently, on many parts of the worlds oceans, between very different types of ships, and in very varied environmental conditions. Different techniques are used to suit the prevailing conditions. These notes will look at some of the Shiphandling problems involved in such operations.

S.T.S. Operations on an Anchored Ship - in this case one ship (normally the larger) remains at anchor throughout the operation, allowing the second ship (normally smaller, and more manoeuvrable) to berth alongside. The main shiphandling problem during this berthing operation will probably be **Yawing** of the Anchored Ship. Such Yawing can make a safe berthing very difficult, particularly if a combination of some of the following unfavourable factors is present :-

a) The Anchorage is an exposed open roadstead.
b) Strong and Conflicting Environmental Conditions of Wind, Sea, and Current.
c) The use of Large Ships.
d) The Manoeuvring Characteristics of the Berthing Vessel being unsuitable for the task. (Suitable Manoeuvring Characteristics for such a Vessel could include - size below 100,000 Dwt, Bridge Control of Main Engine, Controllable Pitch Propeller, High Engine Power in relation to Dwt, Adequate Steerageway at Low Minimum Speed, and a Powerful Bow Thruster).

If a wrong combination of the above factors is present, then a difficult operation could become **potentially very dangerous;** it would be advisable to consider the alternatives, of either postponing the operation, or carrying out the berthing with both ships underway. Some aspects of berthing, with both ships underway, are described below.

Control of S.T.S. Operations - it is recommended that an officer, experienced in S.T.S.Operations, is appointed to control the conduct of the operation. This officer could be the Master of one of the two ships; alternatively he could be a "Lightering Master", specially allocated to the Berthing Vessel for the operation. He normally needs to make the following action before the "Berthing phase" can start :-

a) Arrange a rendezvous for the operation, where there is sufficient searoom,
b) Arrange and check efficient communications between ships.
c) Ensure that suitable Yokohama fenders are provided and rigged upon one of the ships.
d) Ordering the most suitable "Lightering Course" for the operation; this will depend on prevailing weather conditions, and the characteristics and state of loading of the two ships.
e) Determining the "Lightering Speed" for the operation; this will normally be the minimum speed at which both ships are able to maintain steady engine revs, and steerageway. During the "Berthing phase", the "Guide"(normally the larger ship) will need to steer the "Lightering Course" at steady revs, to maintain the "lightering speed" - these revs. should not be altered except in an emergency.
f) Ensuring that S.T.S. procedures are thoroughly understood aboard both ships by Master. Officers, and Crew.

Dangerous Positions during S.T.S.Operations - it is important to be aware of two potentially dangerous positions, which need to be avoided during the "berthing phase".
a) Diagram "X" shows the starboard bow of the Berthing Vessel getting too close to the starboard quarter of the Guide. **Strong Interaction forces** will tend to attract the bow of the Berthing Vessel into the side of the Guide - at the same time the Guide will tend to be turned to Starboard across the bows of the Berthing Vessel.
b) Diagram "Y" shows that the Berthing Vessel has overshot the Guide during the final approach. **Strong Interaction forces** will now tend to attract the bows of the Guide into the after section of the hull of the Berthing Vessel - at the same time the Berthing Vessel will tend to be turned across the bows of the Guide.

To avoid these two dangerous positions two distinct methods of approach, and berthing have been developed, namely :-i) The Parallel Approach - a safer slower method.
ii) The Angled Approach - a faster method, where considerable experience and expertise are required.

The Parallel Approach - see diagram A. The Berthing Vessel approaches the Guide from the quarter, and "takes station" about a ship's length off- this avoids passing through the dangerous Interaction area around the Guide's stern. The Berthing Vessel does not attempt to close the Guide until the following conditions are matched to the Guide :-
a) Speed.
b) Position.

The Berthing Vessel now starts to close the Guide at a fine angle of some 10 degrees or less. As the distance closes, care must be taken for both Speed and Position of the Berthing Vessel to match that of the Guide. Interaction Forces around the Bows of each vessel will tend to oppose contact between the ships. It is essential for the Guide to use effective rudder to counteract this force, and maintain a steady course. The Berthing Vessel will need to use rudder to drive the ships together.

The Berthing Vessel should aim to make "first contact" on the forward shoulder fender, and still maintaining the approach course at a fine angle to that of the Guide. Immediately after "first contact" there will be a tendency for the Berthing Vessel to bounce off the shoulder fender; this tendency will be reinforced by Interaction pressure forcing the Bows apart, and Interaction suction bringing the sterns together. At this stage the Berthing Vessel will need to be prepared to use considerable port rudder to stop the bows separating, and a gap opening between the two ships.

It is considered advisable for the Berthing Vessel to remain bows in to the Guide at a fine angle until all the forward mooring lines and springs are secured. The Berthing Vessel can then ease gently parallel to the Guide assisted by Interaction suction at the stern. After mooring lines and springs can now be secured.

Once the Berthing Vessel is fully secured to the Guide it is normal practice to proceed to anchor the larger ship, prior to cargo transfer. However, circumstances may favour transferring cargo underway.

The Angled Approach - see Diagram B. This method is faster than the Parallel Approach, but does require considerable expertise and experience, and thus is potentially more dangerous.

The Berthing Vessel closes the Guide from the quarter at a fine angle, aiming to make "first contact" on the forward shoulder fender; the Berthing Vessel thus needs a slightly greater speed than the Guide during this approach. The Berthing Vessel needs to maintain this speed advantage when passing through the Guide's quarter wake, and then through the dangerous Interaction area around the Guide's stern.

It is then necessary to reduce the Berthing Vessel's speed, so that by the time of "first contact", the two ships speeds are matched. This is where expertise is required, as effective steerageway must be maintained.

Once "first contact" is made, then the procedures described under Parallel Approach apply.

Precautions during Cargo Transfer - Careful attention needs to be paid to Mooring Lines during the transfer of Cargo, due to potential changes in the following factors :-

a) Weather Conditions.
b) Change of Tide.
c) The freeboards of both Vessels will be changing.
d) Stability changes may well affect the Rolling Periods of both vessels.

Unberthing - on completion of Cargo transfer it is important that the Unberthing Operation is carefully planned, and safely executed. In particular the following points need consideration: -

a) The Freeboards of both Vessels will have changed considerably since Berthing.
b) The Sequence for letting go Mooring Lines needs careful consideration, particularly when only small deck crews are available.
c) All Personnel involved need thorough Briefing.
d) The Departing Vessel will probably be fully laden. Powerful Engine movements will be required to get her moving initially, particularly when Wind and/or Current are present.
e) Departure can be made, either with both vessels underway, or from one ship at anchor; the actual method will depend on local conditions and procedures.
f) When all Mooring Lines have been let go, Interaction Forces may cause both Vessels to remain locked together. In such circumstances care, patience, and skilled planned shiphandling are needed to ensure a safe departure.
g) The departure Procedure may involve "lifting off" the bow of the departing vessel. Consideration needs to be given to the effect of the vessels' sterns closing - Boats and Bridge Wings can come into contact, particularly when ships are Rolling in a seaway. Appropriate fendering needs to be in place.

DANGEROUS POSITIONS

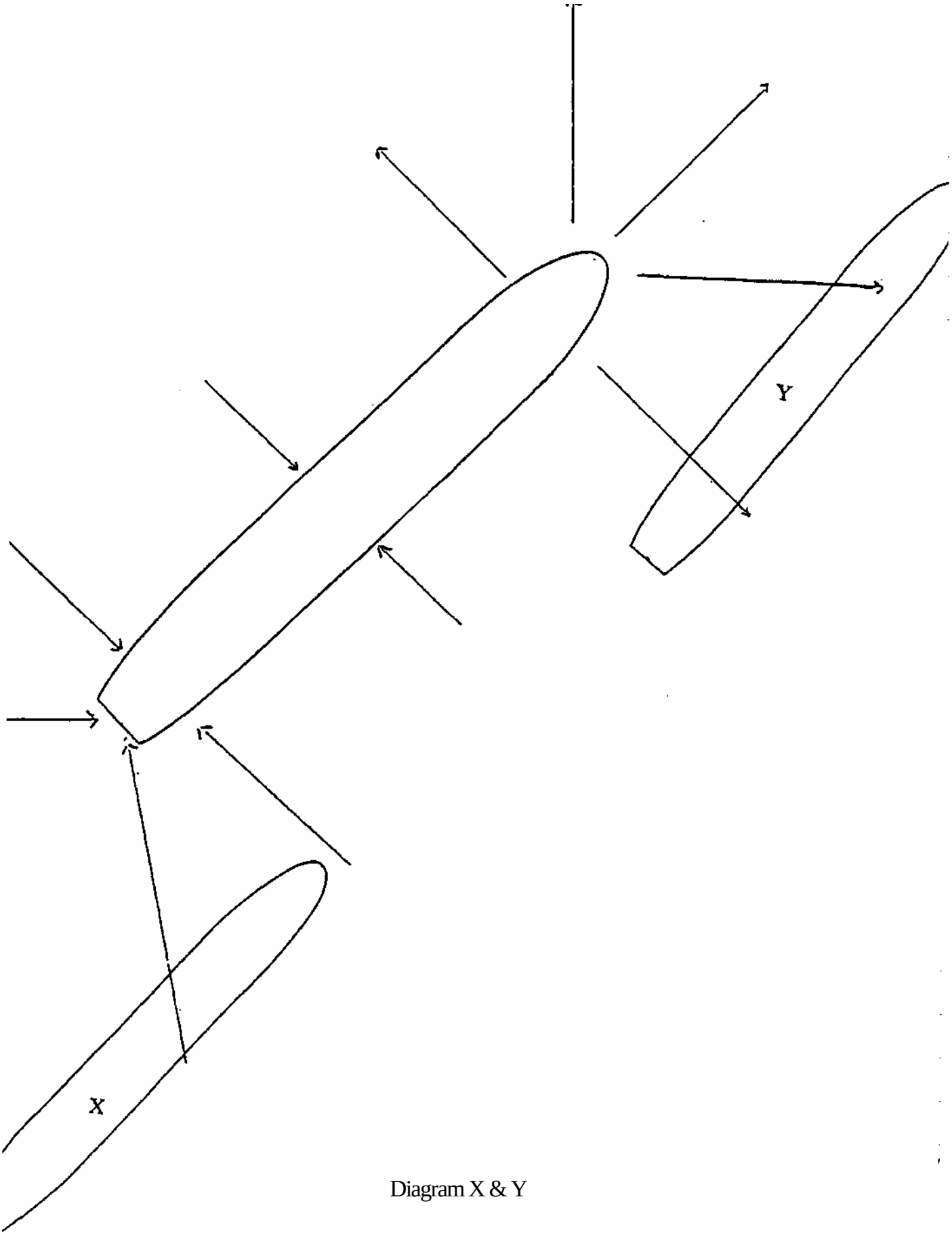

Diagram X & Y

IN LIGHTERING

Parallel Approach

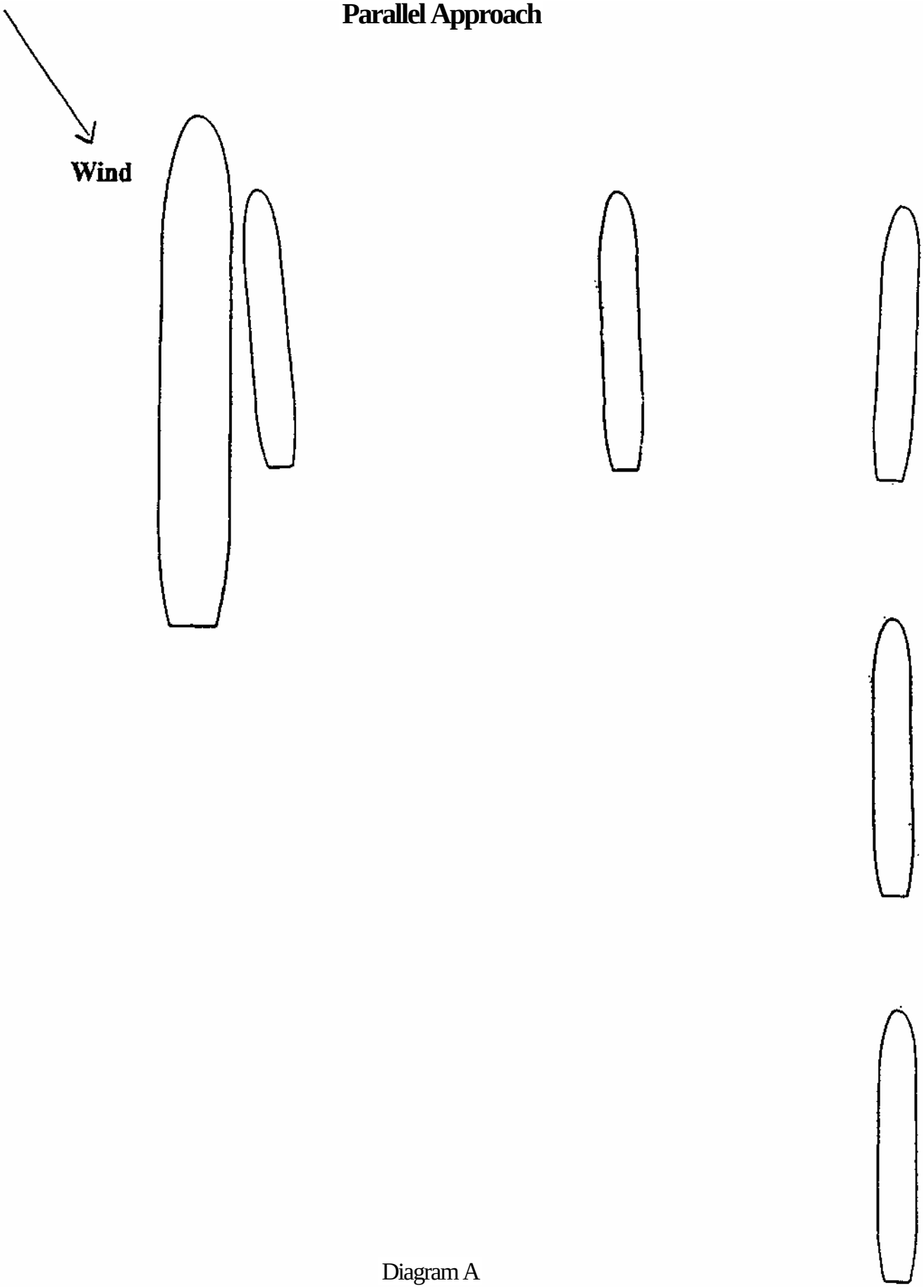

Diagram A

Angled Approach

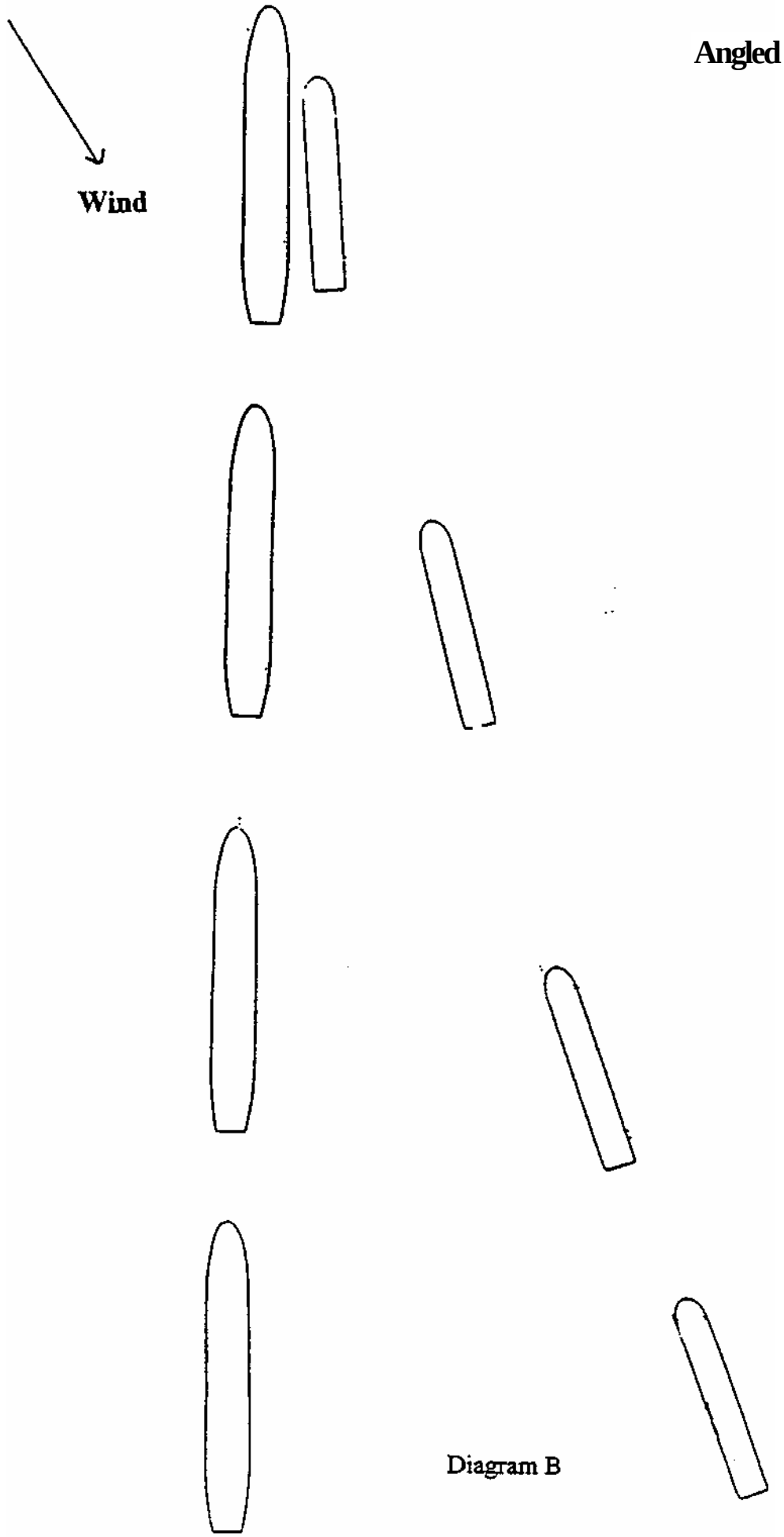

Diagram B

APPENDIX ONE

SBM OPERATIONS

SPM Single Point Mooring

Is an integrated mooring and fluid transfer system to which a tanker is moored by its bow and is allowed to weather vane around the mooring in response to the forces of wind and sea. Fluid is transferred between the SPM and the tanker through flexible hose strings. The most common types of SPM is the SBM (Single Buoy Mooring)

CALM Catenary Anchor Leg Mooring (figure 1(a) (b))

Consists of a large mooring buoy anchored by four or more chains extending in catenaries to anchor points on the sea floor some distance from the buoy. The tanker is moored to a rotating deck or turntable on top of the buoy. Floating hose strings connect the overboard pipework of the turntable with the manifold of the moored tanker. Underbuoy hose strings connect the fluid swivel on the buoy with the PLEM (Pipeline End Manifold) in either a Chinese Lantern or Lazy-S configuration

SALM Single Anchor Leg Mooring (figure 2)

Consists of a mooring buoy attached to a gravity or piled base by a single anchor leg. The anchor leg consists of a large chain with a swivel incorporated to allow buoy rotation. A fluid swivel is usually mounted about the anchor leg on top of the base. Hose strings extend from the fluid swivel to the manifold of the moored tanker. The mooring base may be connected to the submarine pipeline either by rigid piping or by jumper hoses from the mooring base to a PLEM

Hose Pick up Arrangement (figure 3)

The recommended system for lifting a hose for connection to the tanker manifold is the "end lift" method. In this method the hose is lifted from the water by the tanker's derrick and the ship's derrick hook is connected to a short length of lifting chain shackled to the end of the hose string. A snubbing rope is used to hold the hose close alongside while the hose support chain is connected, usually by a length of auxiliary chain and slip hook connected by wire to a set of bitts or shackled to a special cleat. The hose is then lowered into position for connection to the manifold.

If the length of hose overlaps the manifold or is too short, it can be raised again and the supporting chain length adjusted by means of the slip hook and re-lowered. Once connected a strop is fitted around the hose and the weight taken by the ship's derrick.

Mooring Arrangements

Incompatibility between terminal mooring equipment and shipboard fittings can compromise the security of the mooring system, safety of personnel and prolong the time taken for mooring operations. It has therefore been recommended by the OCIMF (Oil Companies International Marine Forum) that mooring equipment available at terminals be consistent and that tankers likely to trade to SBMs be fitted with bow chain stoppers of recommended design. Some terminals may accept Smitt Type brackets as an alternative.

The winch employed to handle the moorings should be capable of lifting 15 tonnes.

The size of the chafe chain used varies according to the size of ships moored at the terminal and two moorings should be used for vessels of over 150,000 tons dwt. In order to protect the integrity of SBMs weather operating limits are necessary at some terminals.

It is important that the bow fair leads through which the moorings pass are as close to the ship's centreline as possible (Figure 4). Passing two chains through a single fair lead can cause jamming.

Terminals with SBMs capable of accepting a full range of tanker sizes, should be equipped with a combination chafe chain of 76 mm (Figure 5). This chain is 11.2 metres in length and a combination of 76 mm and 54 mm stud link chain with suitably positioned triangular plates. The 54 mm chain is designed for smaller vessels under 100,000 dwt. The SWL of the 76 mm chain is 200/250 tones and the 54 mm chain is 100 tons. Pick up ropes are on average 100 - 150 metres x 80 mm.

Tanker's fair leads should be spaced no more than 3 metres apart for minimum spread of moorings, ie. the weight of a swinging tanker may be taken all on one mooring if spread be too great. Ships below 150,000 dwt need only provide one fair lead which should be on the centre line.

In practice special SBM bow chain stoppers have been found safe and easy to use and maintain. The bow chain stopper should hold the first vertical link to pass into the stopper, ie, the first vertical 76 mm link (54 mm for ships of less than 100,000 dwt.

All new buildings of 150,000 dwt and above should be fitted with two bow stoppers, either the hinged bar type or Torque type (Figure 6), capable of accepting 76 mm chain. These stoppers should be 2.7 m to 3.7 m inboard from the bow fair leads. They should be sited to have a direct lead between fair lead and pedestal leads or drum end of the winch.

Approaching the pick up lines the pilot / berthing master may go to the focsle to con the ship via walkie talkie radio link to the bridge, and to supervise the mooring operation. From the bow he has a much better view close ahead of the ship than from the bridge.

As the bow approaches the pick up lines, the speed of the vessel must be less than half a knot over the ground and decreasing. The pick up lines are designed to bring the chafing chains on board. The slack is picked up as the vessel slowly approaches the SBM. These pick up lines must be kept slack. They are not designed to be heaved in as a means of mooring the vessel towards the buoy. The vessel can be held in position while the chains are made fast by careful use of kicks ahead.

At some SBM terminals there are no tugs, but two line boats are usually used to assist in the mooring. One boat moves the floating hoses clear on the tanker's approach and the other brings the pick up ropes to the vessel. They can also give valuable information to the vessel regarding her movement through the water and distance from the SBM, which is easier to assess from sea level than from the height of the foc'sle. A good multi-axis doppler log would of course be ideal for this operation.

Weather limitations for berthing are primarily the state of the sea that it is possible for the line boats to operate in. Various ports have introduced wind strength limitations both for berthing and loading at SBMs, and these limitations vary according to location, proximity of land, government attitudes, oil companies etc.,

Most ports have a freeboard limitation for berthing vessels, eg, 65 feet and a draft restriction depending on the depth of water over the PLEM

Loading/Discharging at SBM

Normally a loading master or the pilot remains on board, once the vessel is moored, to co-ordinate communications between ship and terminal, as well as assessing weather situations with the Master should it be thought necessary to stop loading, ie, severe storms, lightning and port limitations.

Engines are normally to be on standby throughout, or a maximum 10 minutes notice. Turbines are often run astern at very slow revs. This is necessary should there be a wind/current shift or storm approach from abaft the beam, the engines can then be used to resist the ship "riding up" onto the buoy as she swings onto her new heading.

Approaching the pick up lines the pilot / berthing master may go to the focsle to con the ship via walkie talkie radio link to the bridge, and to supervise the mooring operation. From the bow he has a much better view close ahead of the ship than from the bridge.

As the bow approaches the pick up lines, the speed of the vessel must be less than half a knot over the ground and decreasing. The pick up lines are designed to bring the chafing chains on board. The slack is picked up as the vessel slowly approaches the SBM. These pick up lines must be kept slack. They are not designed to be heaved in as a means of mooring the vessel towards the buoy. The vessel can be held in position while the chains are made fast by careful use of kicks ahead.

At some SBM terminals there are no tugs, but two line boats are usually used to assist in the mooring. One boat moves the floating hoses clear on the tanker's approach and the other brings the pick up ropes to the vessel. They can also give valuable information to the vessel regarding her movement through the water and distance from the SBM, which is easier to assess from sea level than from the height of the foc'sle. A good multi-axis doppler log would of course be ideal for this operation.

Weather limitations for berthing are primarily the state of the sea that it is possible for the line boats to operate in. Various ports have introduced wind strength limitations both for berthing and loading at SBMs, and these limitations vary according to location, proximity of land, government attitudes, oil companies etc.,

Most ports have a freeboard limitation for berthing vessels, eg, 65 feet and a draft restriction depending on the depth of water over the PLEM

Loading/Discharging at SBM

Normally a loading master or the pilot remains on board, once the vessel is moored, to co-ordinate communications between ship and terminal, as well as assessing weather situations with the Master should it be thought necessary to stop loading, ie, severe storms, lightning and port limitations.

Engines are normally to be on standby throughout, or a maximum 10 minutes notice. Turbines are often run astern at very slow revs. This is necessary should there be a wind/current shift or storm approach from abaft the beam, the engines can then be used to resist the ship "riding up" onto the buoy as she swings onto her new heading.

A line boat, or in some ports a tug, is normally made fast aft for this purpose also and can be used to "haul" the ship astern should it be thought unnecessary to use the engines.

A good foc'sle head look out is also essential so that the relative position of the SBM to the ship can be monitored and should the SBM pass beyond abeam of the bulb or stem, reported immediately to the loading master. He should also keep watch on the integrity of the buoy and hoses and report immediately any suspected oil on the water surface.

Unberthing from SBM

Is a fairly straightforward procedure. If the vessel is heading into a strong wind/current, it may be necessary to move ahead to give "slack" on the lines to enable the chafe chains to be released from the stoppers or the Smitt bracket unshackled.

The vessel is then moved very slowly astern either by using the wind to drop back or engines periodically astern, so that the pick up rope slowly "runs out" from the foc'sle. This is so that should the rope snag on any obstruction on the foc'sle there may be time to clear it or stop the ship, also if the lines were released quickly in a bunch, there is a good chance that the lines would become tangled and the berth inoperative until they were cleared.

Once the pick up ropes are clear the vessel can be away from the berth for departure.

Summary

Despite most SBMs being moored in comparatively open waters, as opposed to alongside jetties in harbour, the utmost concentration, care and attention must be employed at all times. A severely damaged jetty can lead to that jetty being out of action for some time, a severely damaged SBM can lead to the port being closed with the subsequent loss of revenue and probably large pollution costs.

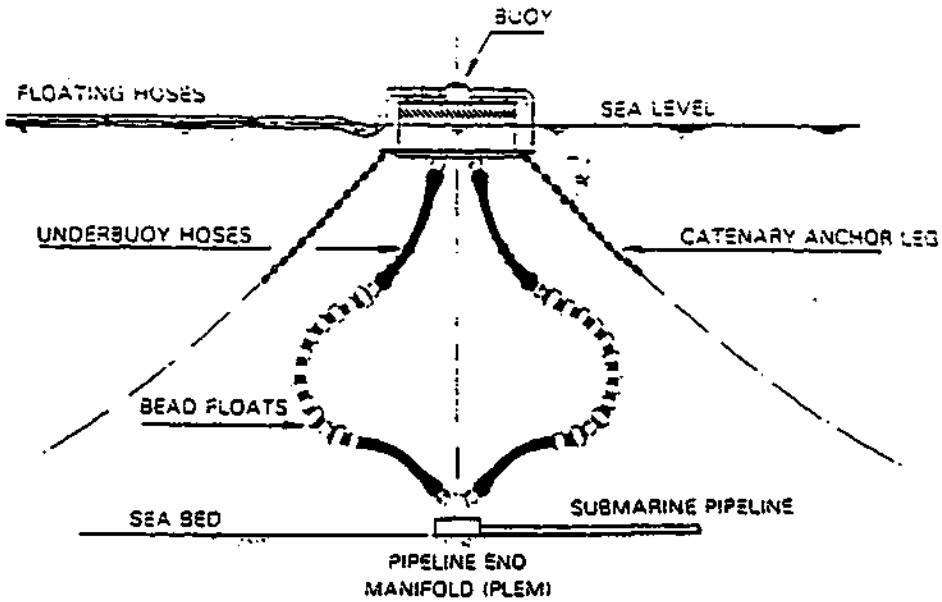

(a) CATENARY ANCHOR LEG MOORING (CALM)
"CHINESE LANTERN" CONFIGURATION

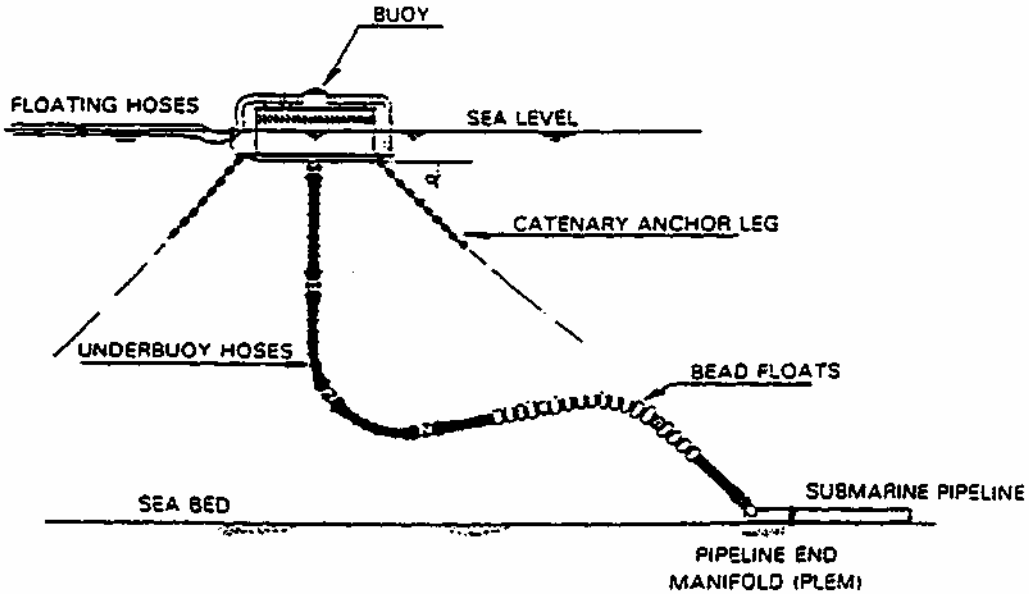

(b) CATENARY ANCHOR LEG MOORING (CALM)
"LAZY-S" CONFIGURATION

Figure 1

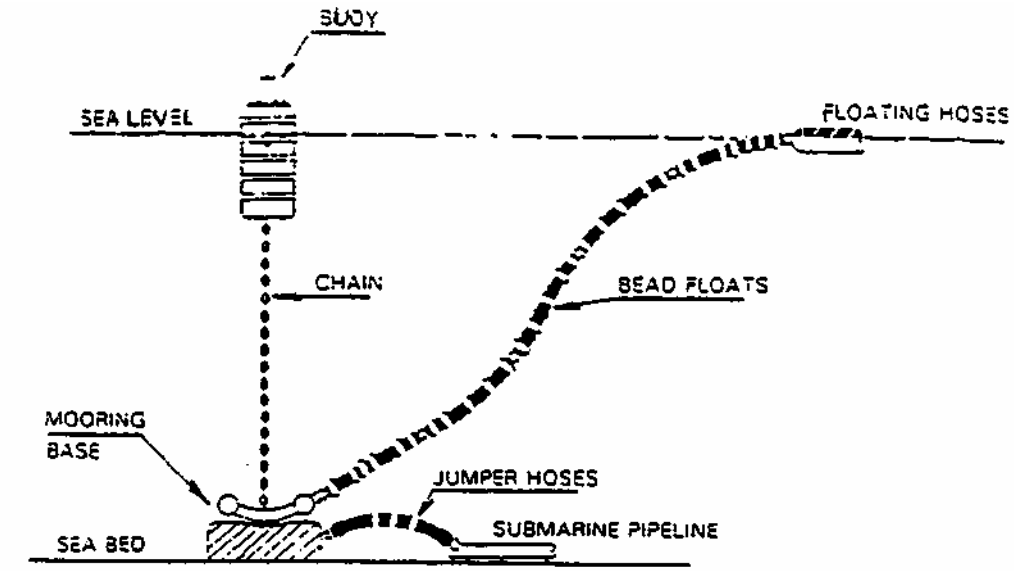

SINGLE ANCHOR LEG MOORING (SALM)

Figure 2

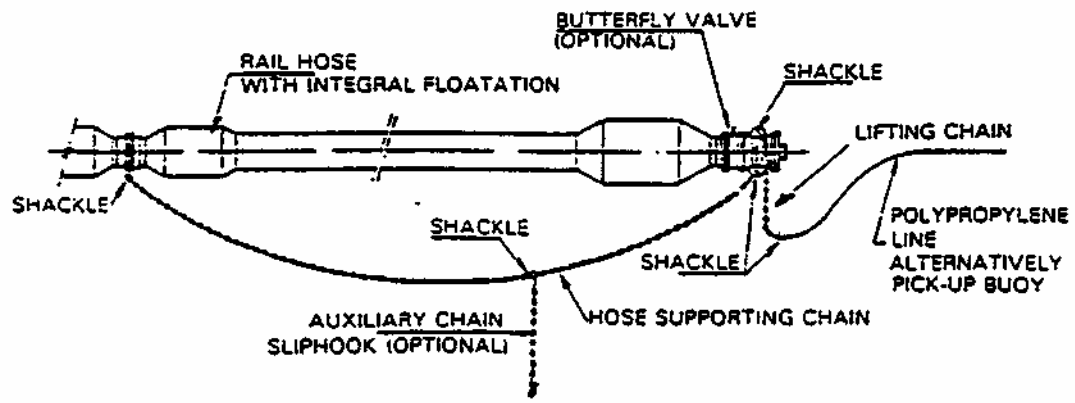

HOSE "END LIFT"

Figure 3(a)

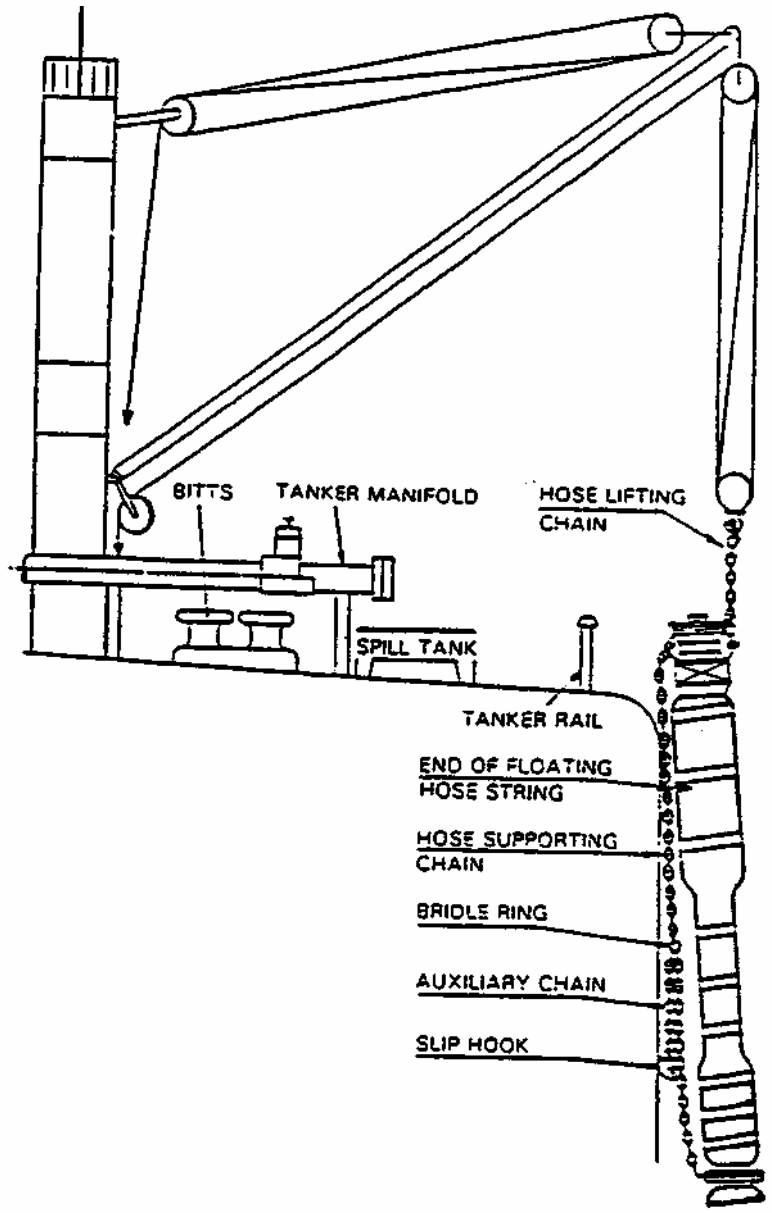

TANKER HOSE CONNECTION — SEQUENCE 1

Figure 3(b)

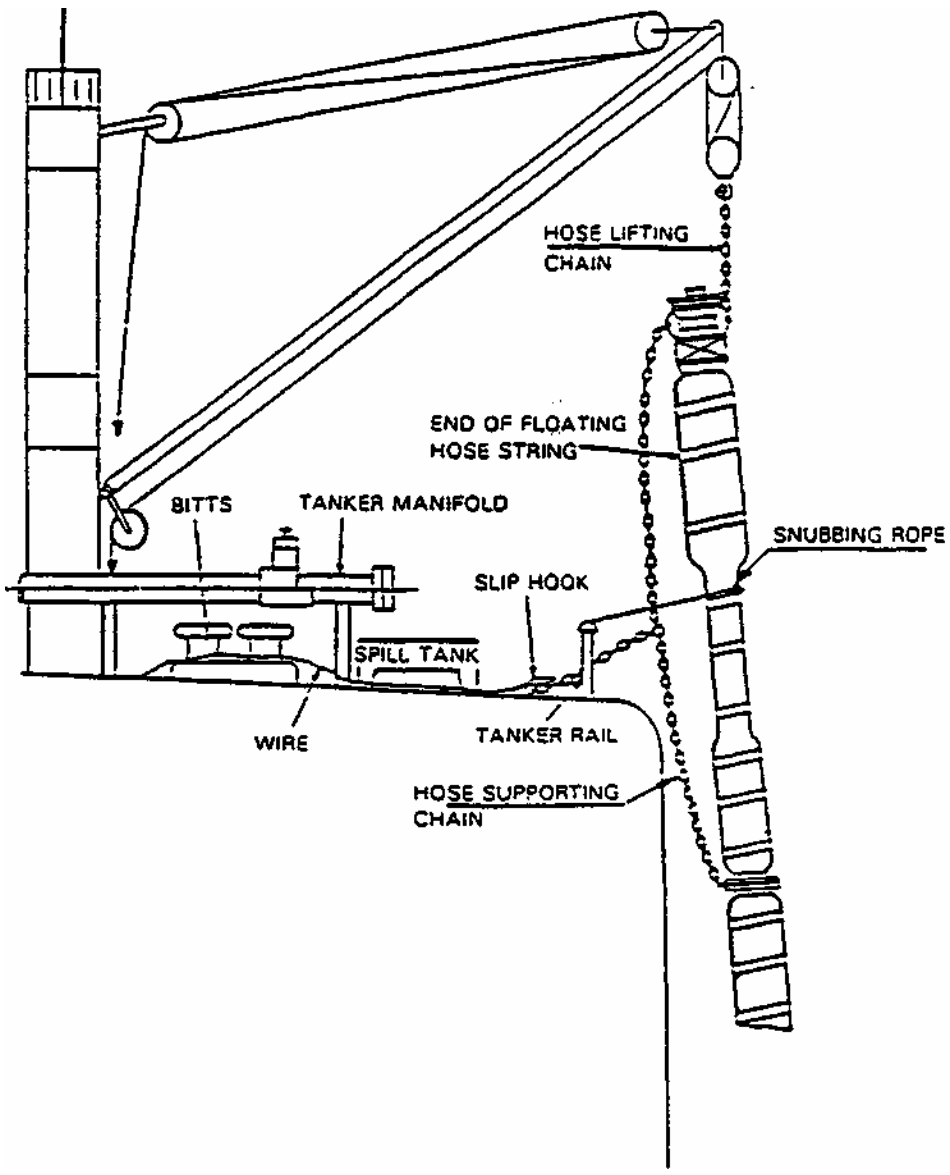

TANKER HOSE CONNECTION – SEQUENCE 2

Figure 3(c)

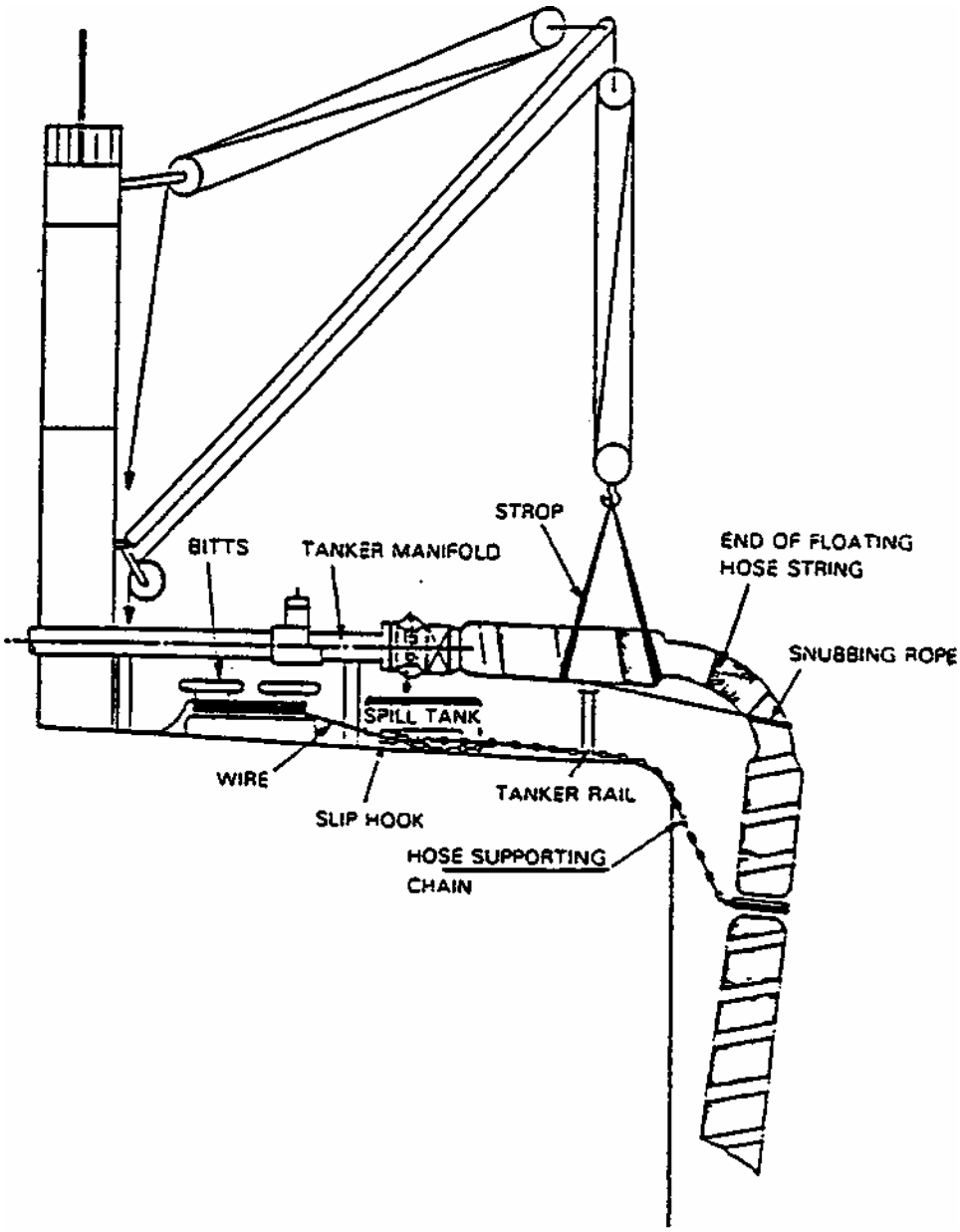

TANKER HOSE CONNECTION — SEQUENCE 3

Figure 3(d)

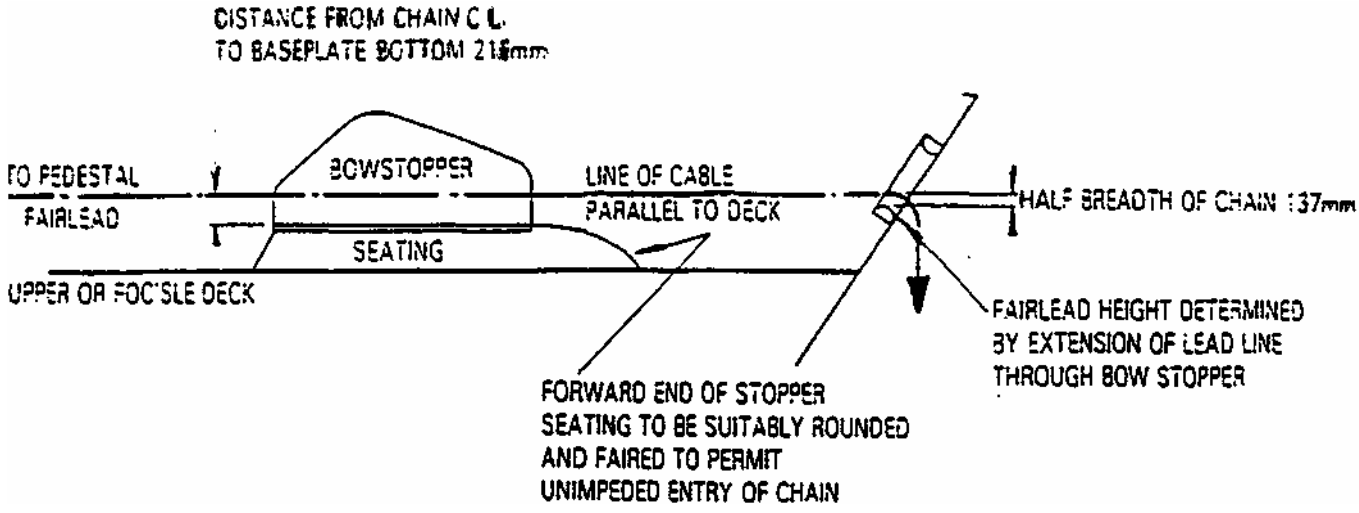

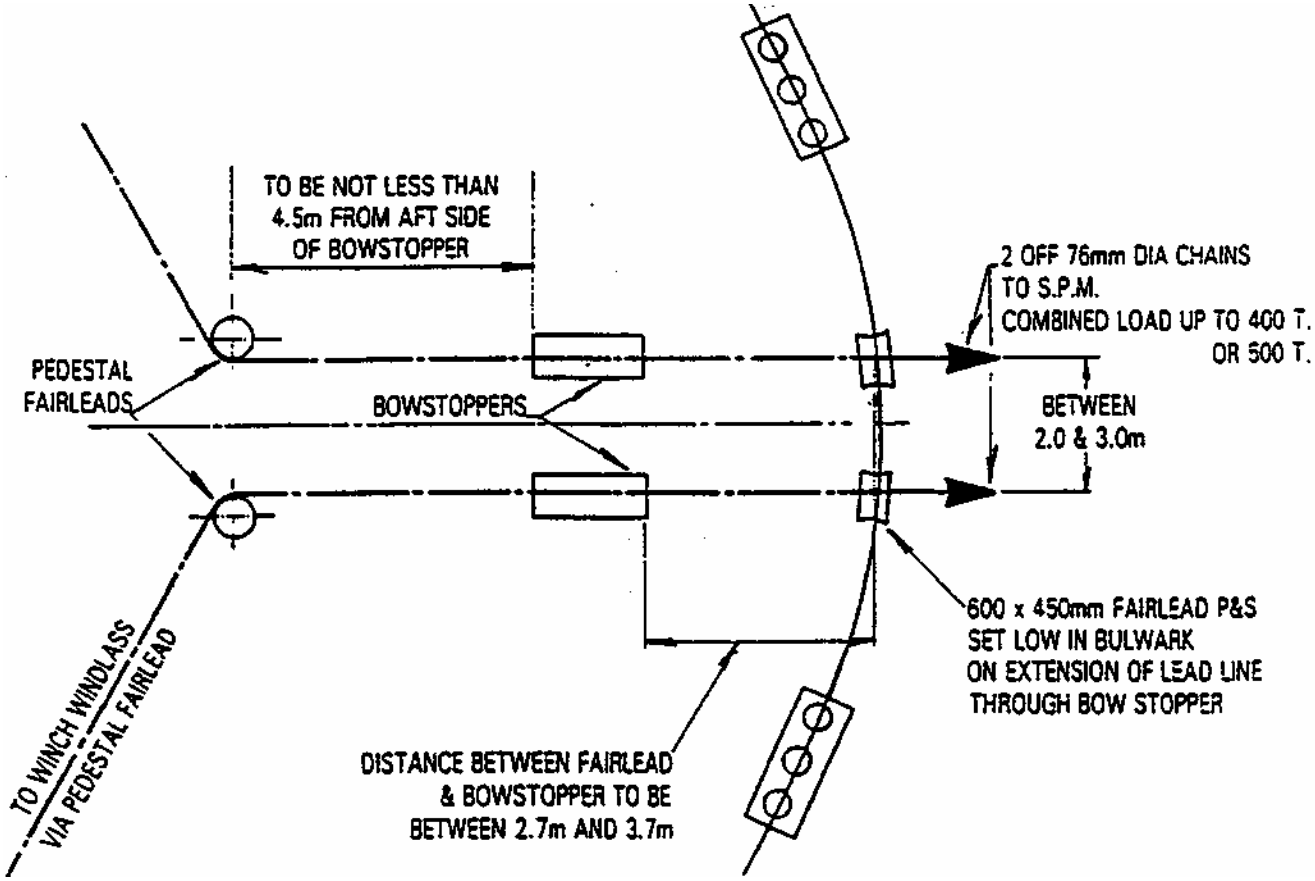

POSITIONING OF FORWARD FAIRLEADS, BOW CHAIN STOPPERS AND PEDESTAL ROLLER LEADS

Figure 4

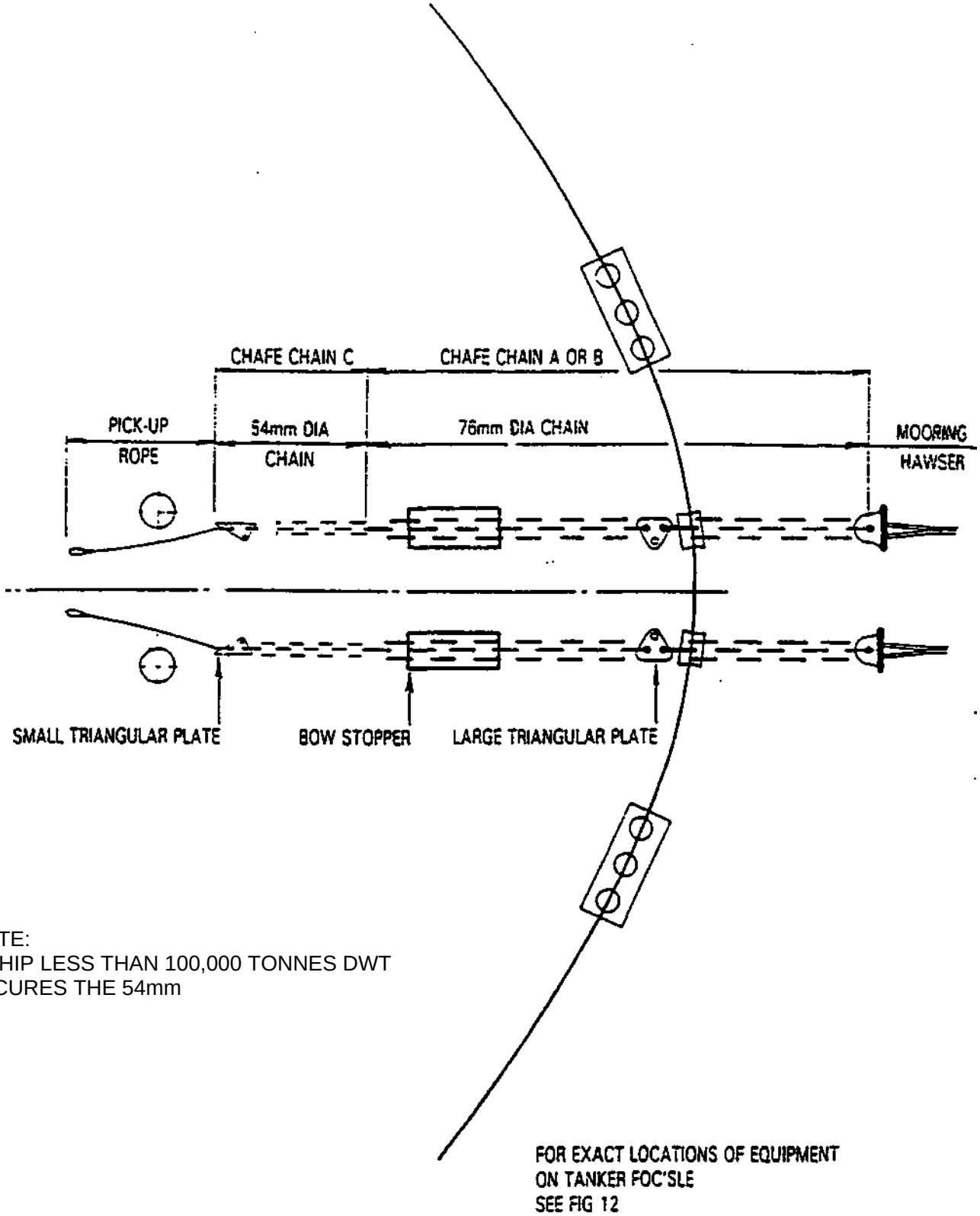

NOTE:
A SHIP LESS THAN 100,000 TONNES DWT
SECURES THE 54mm

SCHEMATIC LAYOUT:
S.P.M. FITTED WITH COMBINATION
CHAFE CHAIN A OR B PLUS CHAFE CHAIN C
SHIP MORE THAN 100,000 DWT FITTED WITH CHAIN STOPPERS

Figure 5(a)

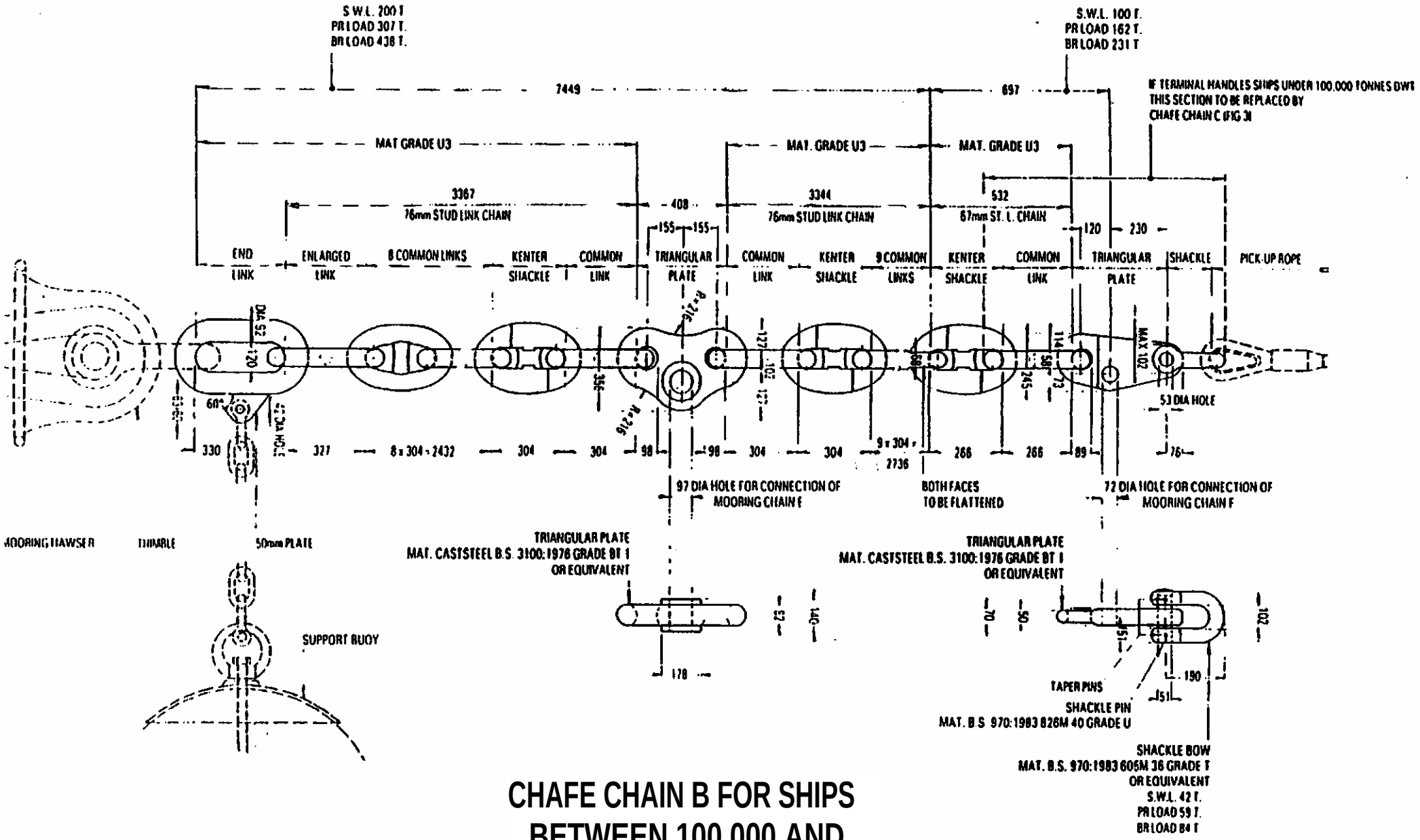

CHAFE CHAIN B FOR SHIPS BETWEEN 100,000 AND

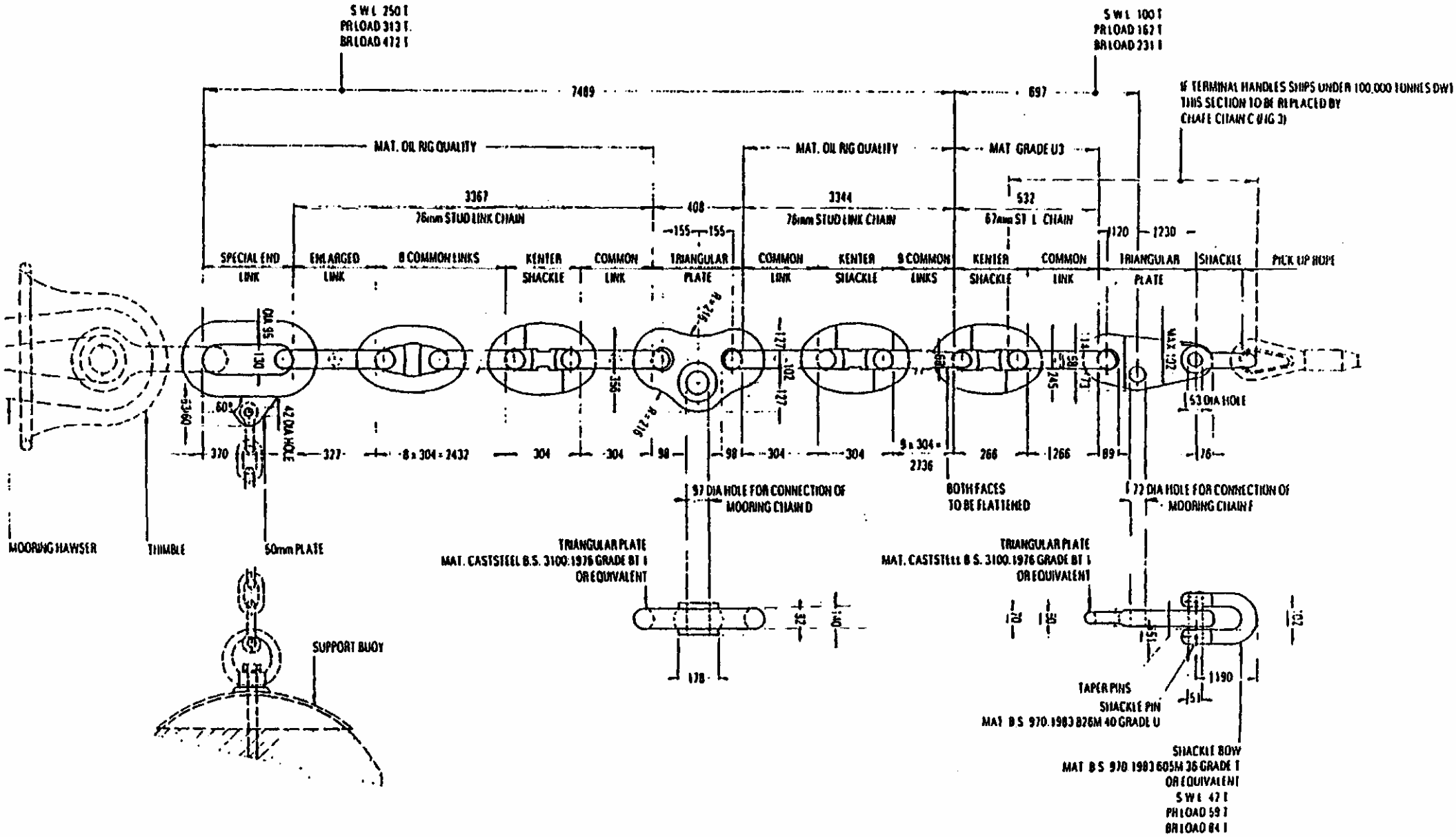

CHAFE CHAIN A FOR SHIPS OVER 350,000 TONNES DWT

Figure 5(c)

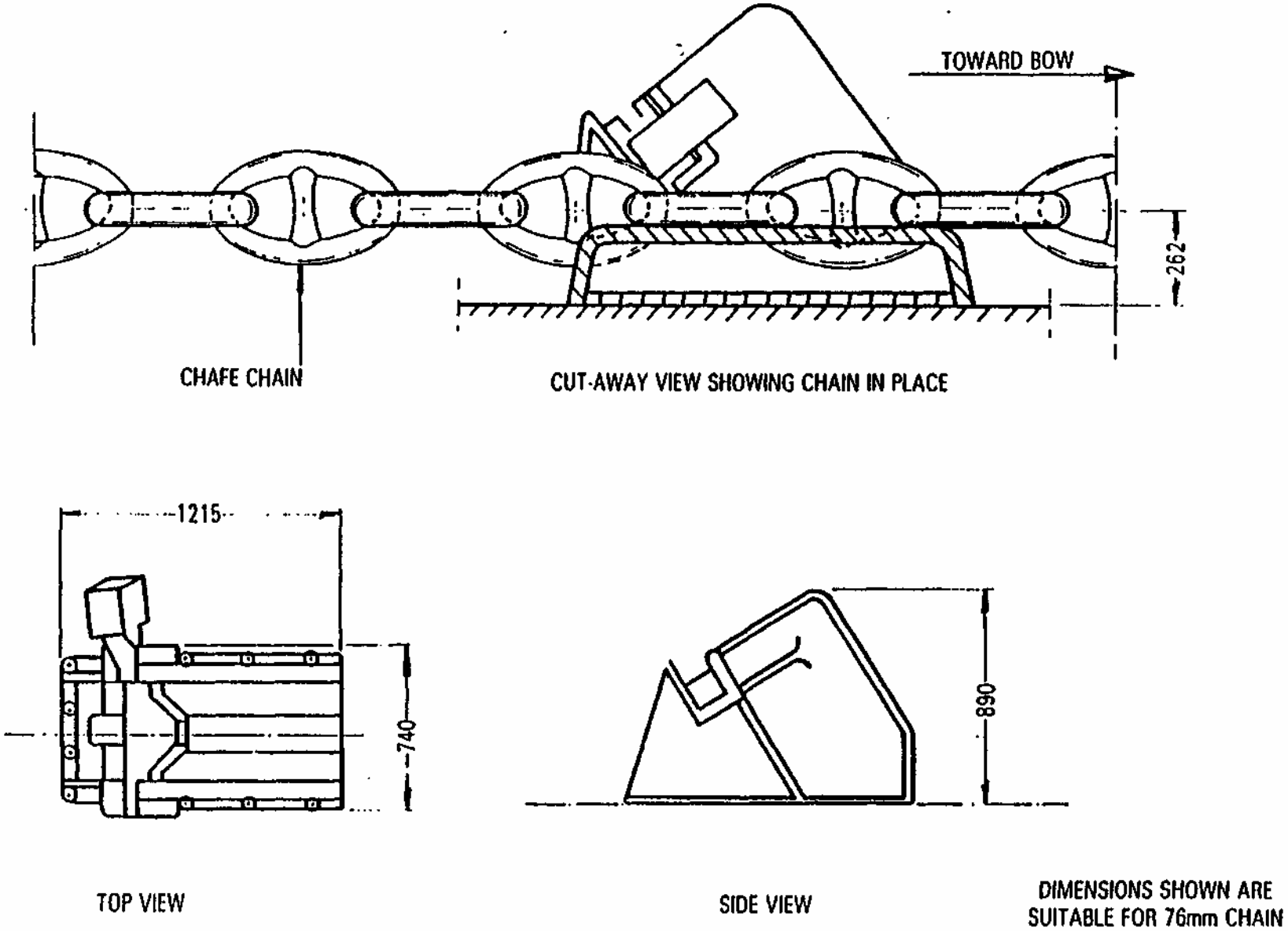

Figure 6(a) **HINGED BAR-TYPE CHAIN STOPPER**

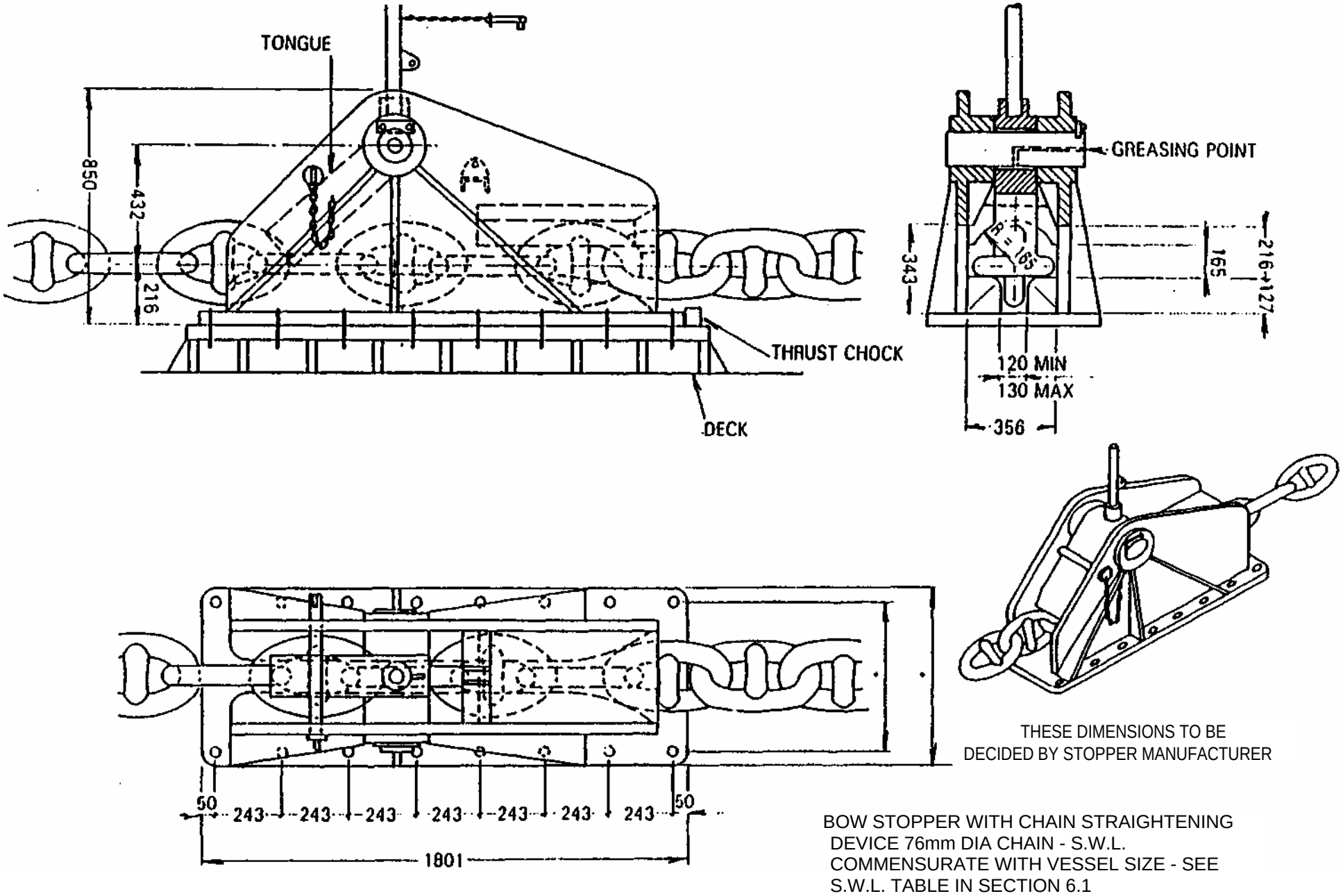

Figure 6(b) **TONGUE TYPE CHAIN STOPPER**

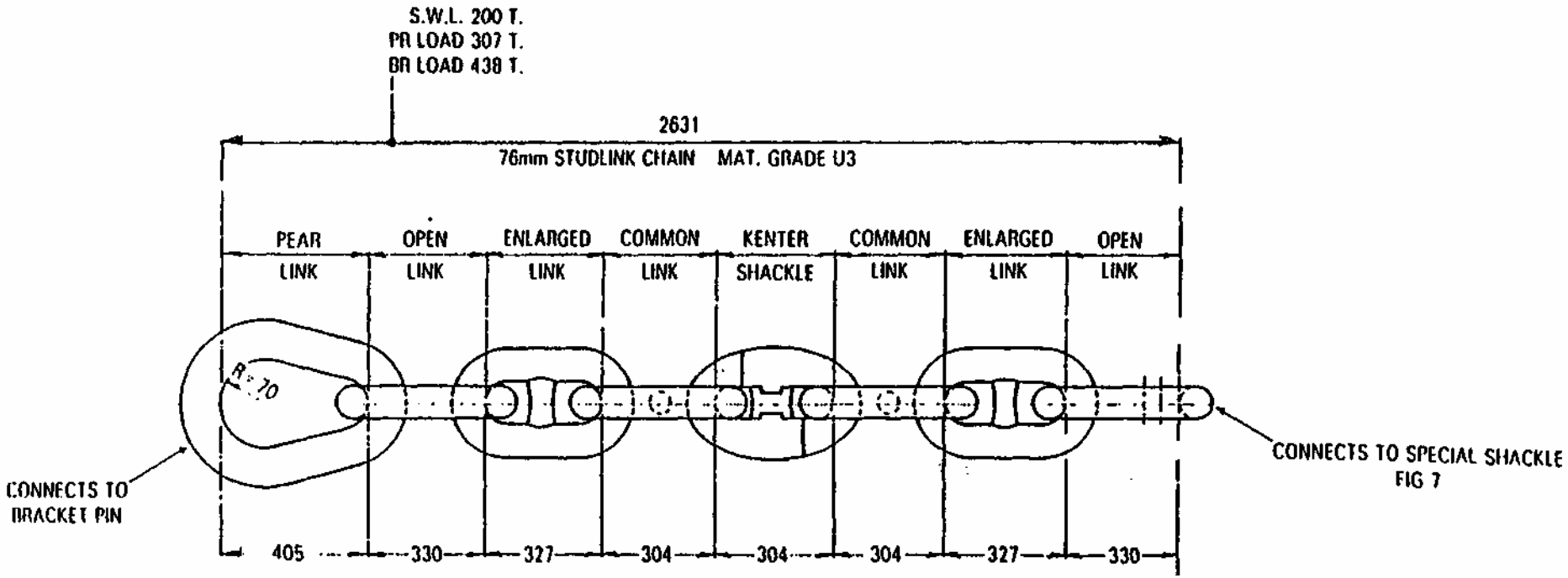

SIX LINKS MINIMUM.

Figure 7 MOORING CHAIN E FOR SHIPS BETWEEN 100,000 AND 350,000 TONNES DWT

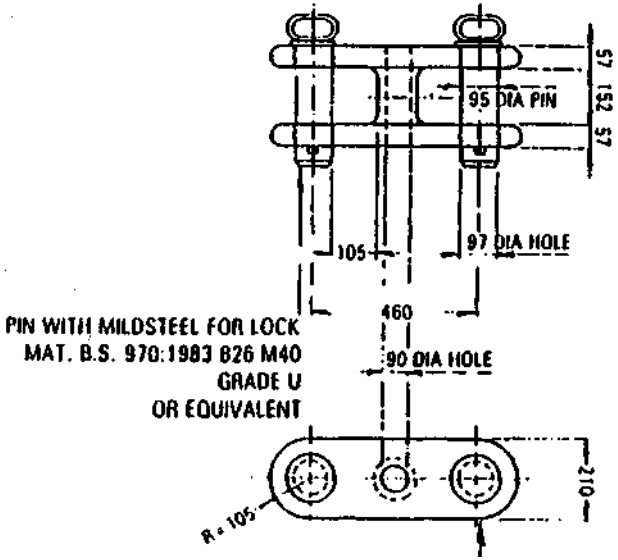

SPECIAL SHACKLE
COMPLETE WITH TWO FORELOCK PINS
MAT. CASTSTEEL B.S. 3100:1976 GRADE BT1
OR EQUIVALENT
S.W.L 250T
PR. LOAD 314T
BR. LOAD 474T

SHIPS OVER 350,000
TONNES DWT

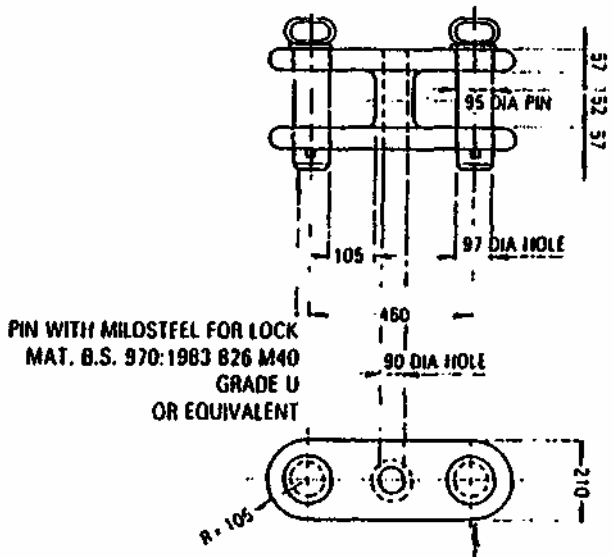

SPECIAL SHACKLE
COMPLETE WITH TWO FORELOCK PINS
MAT. CASTSTEEL B.S. 3100:1976 GRADE BT1
OR EQUIVALENT
S.W.L. 250T
PR. LOAD 314T
DR. LOAD 474T

SHIPS BETWEEN
100.000 AND 350,000
TONNES DWT

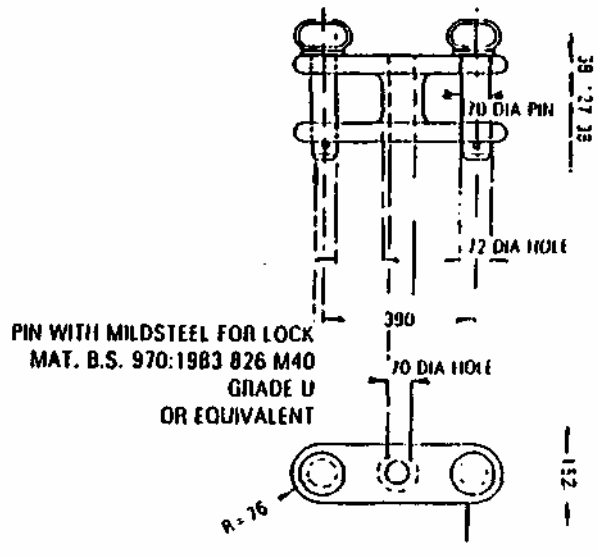

SPECIAL SHACKLE
COMPLETE WITH TWO FORELOCK PINS
MAT. CASTSTEEL BS. 3100:1976 GRADE BT1
OR EQUIVALENT
S.W.L. 250T
PR LOAD 314T
BR. LOAD 474T

SHIPS LESS THAN
100,000 TONNES DWT

Figure 8

SPECIAL SHACKLE FOR CONNECTING MOORING CHAIN TO CHAFE CHAIN

MANNED MODEL SHIPHANDLING COURSE